NEW RESIDENCE FOR PATRICK & MELISSA McGREGOR

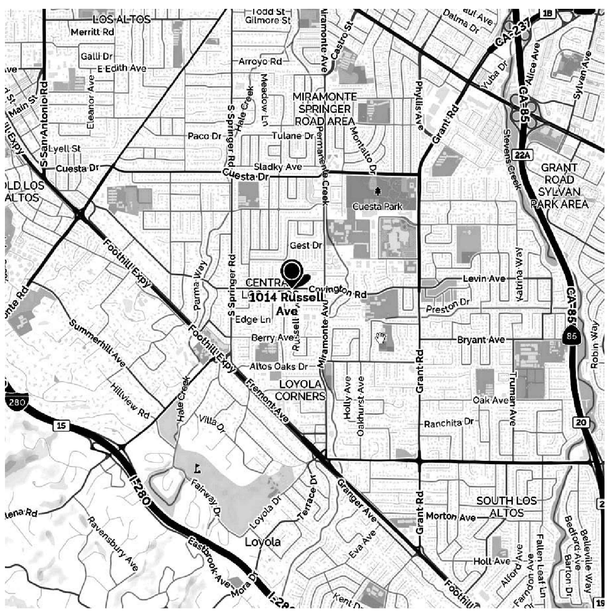
LOS ALTOS
Merritt Rd
Galli Dr
E Edith Ave
Arroyo Rd
MIRAMONTE SPRINGER ROAD AREA
Paco Dr
Tulane Dr
Sladky Ave
Cuesta Dr
Cuesta Park
GRANT ROAD SYLVAN PARK AREA
Gest Dr
1014 Russell Ave
Levin Ave
Preston Dr
Bryant Ave
Oak Ave
Ranchita Dr
Berry Ave
Altos Oaks Dr
LOYOLA CORNERS
Loyola
SOUTH LOS ALTOS
Morton Ave
Holt Ave
Foothill Expy
Grant Rd
Springer Rd
Miramonte Ave
Sylvan Ave
Robin Way
Summerhill Ave
Hillview Rd
Revenbury Ave
Eastbrook Ave
Grangier Ave
Eve Ave
Loyola Dr
Terrace Dr
Fallen Leaf Ln
Barton Dr
Bellevilla Way
Kenton Dr
Hale Creek
Villa Dr
Parma Way
Edge Ln
Edgewood Ave
Oxshurst Ave
Holly Ave
Kenwood Way
Truman Ave
Stevens Creek
Kuss Dr
Alice Ave
Dalma Dr
Gilmore St
Castro St
Meadow Ln
Tomahawk Ln
Montalto Dr
Phillips Ave
Cristo Rey Dr
Lyell St
S Saratoga Sunnyvale Rd
Elaine Ave
Main St
Cuesta Dr
Lincoington Rd
CA-237
CA-85
CA-280
CA-82
I-280
I-280
I-280

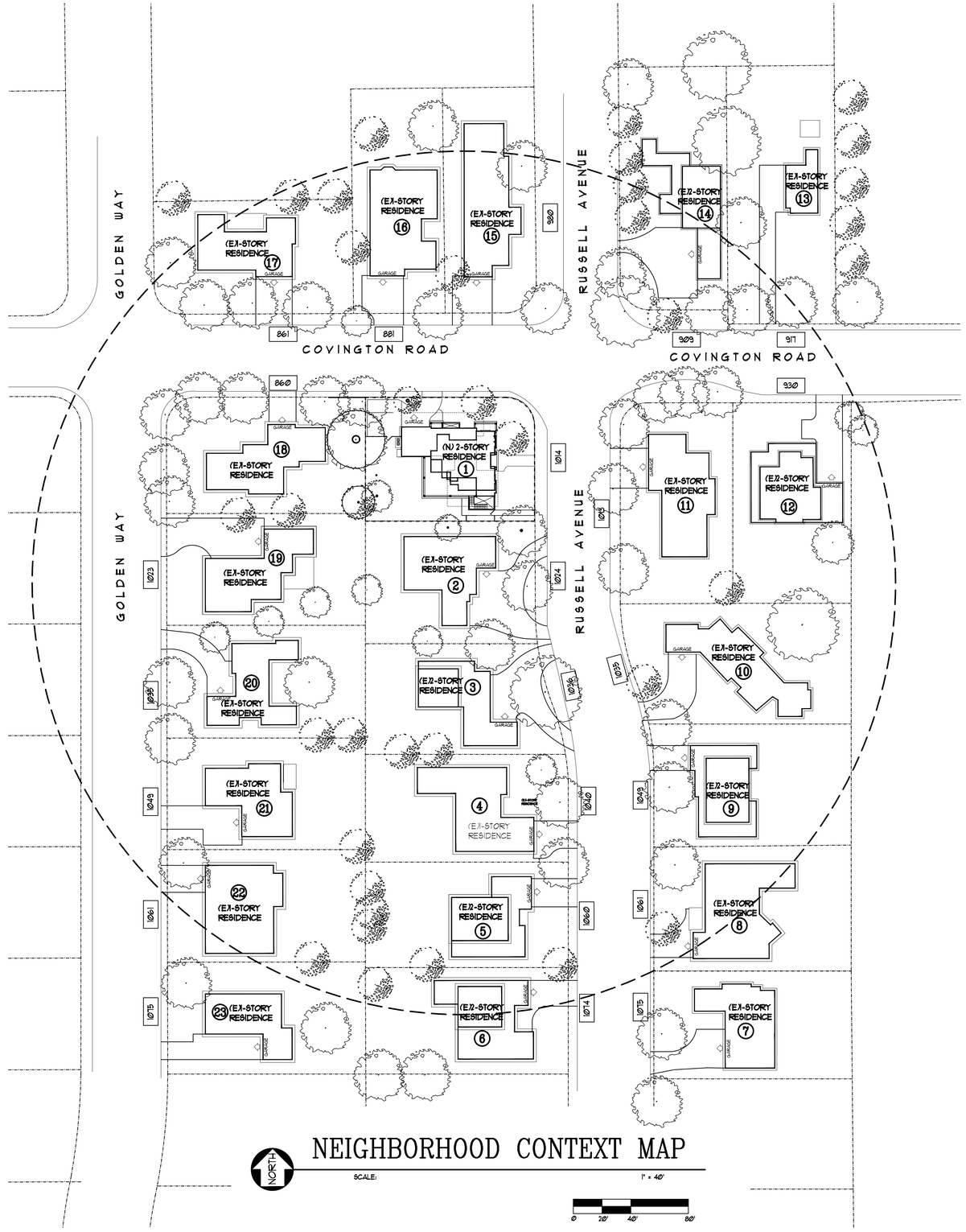

NEIGHBORHOOD CONTEXT MAP

SCALE: 1" = 40'

PROJECT TITLE & LOCATION

NEW RESIDENCE FOR

Patrick & Melissa McGregor

1014 RUSSELL AVENUE
LOS ALTOS, CA 94024

REVISION

J MALIKSI & ASSOC.
ARCHITECTURE ▫ INTERIOR DESIGN

675 MENLO AVENUE
MENLO PARK, CA 94025
TEL. NO. 650 323 2902
FAX NO. 650 323 6433

LICENSED ARCHITECT
JAIME Y. MALIKSI
C-25460
EX. 02/28/17
STATE OF CALIFORNIA

NO.	DATE	ISSUE
	GTM 2-25-2016	ISSUE FOR PLANNING
	GTM 1-13-2016	ISSUE FOR PLANNING

ALL DRAWINGS AND MATERIALS APPEARING HEREIN CONSTITUTE THE ORIGINAL AND UNPUBLISHED WORK OF THE ARCHITECT AND MAY NOT BE DUPLICATED, USED OR DISCLOSED WITHOUT THE PRIOR WRITTEN CONSENT OF THE ARCHITECT.
© 2015 JM MALIKSI & ASSOCIATES

DRAWING TITLE

NEIGHBORHOOD CONTEXT MAP

SCALE: 1" = 40'
PROJECT NAME: MCGREGOR
CADD FILE NO.
DRAWING NO.

A-0.2

1060 RUSSELL AVENUE | 1040 RUSSELL AVENUE | 1036 RUSSELL AVENUE | 1024 RUSSELL AVENUE | 1014 RUSSELL AVENUE

RUSSELL AVENUE LOOKING WEST

1013 RUSSELL AVENUE | 1013 RUSSELL AVENUE | 1035 RUSSELL AVENUE | 1049 RUSSELL AVENUE | 1061 RUSSELL AVENUE

RUSSELL AVENUE LOOKING EAST

930 COVINGTON ROAD | 1013 RUSSELL AVENUE

COVINGTON ROAD LOOKING SOUTH

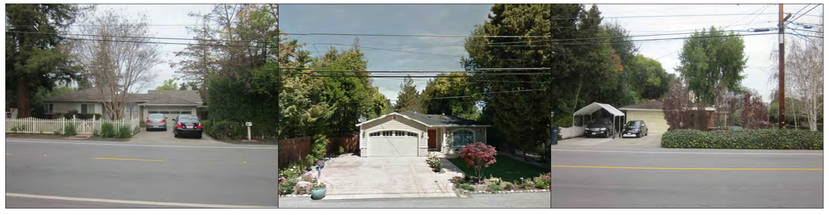

861 COVINGTON ROAD | 881 COVINGTON ROAD | 920 RUSSELL AVENUE

COVINGTON ROAD LOOKING NORTH

920 RUSSELL AVENUE | 909 COVINGTON ROAD

RUSSELL AVENUE LOOKING EAST

909 COVINGTON ROAD | 917 COVINGTON ROAD

COVINGTON ROAD LOOKING NORTH

920 RUSSELL AVENUE | 920 RUSSELL AVENUE | 860 COVINGTON ROAD | 860 COVINGTON ROAD | 860 COVINGTON ROAD

COVINGTON ROAD LOOKING SOUTH

860 COVINGTON ROAD | 1023 GOLDEN WAY | 1035 GOLDEN WAY | 1049 GOLDEN WAY | 1061 GOLDEN WAY

GOLDEN WAY LOOKING EAST

NEIGHBORHOOD CONTEXT PHOTOS

SCALE: N.T.S.

PROJECT TITLE & LOCATION

NEW RESIDENCE FOR

Patrick & Melissa McGregor

1014 RUSSELL AVENUE
LOS ALTOS, CA 94024

REVISION

J MALIKSI & ASSOC.
ARCHITECTURE ▫ INTERIOR DESIGN

675 MENLO AVENUE
MENLO PARK, CA 94025
TEL. NO. 650 323 2902
FAX NO. 650 323 6433

LICENSED ARCHITECT
JAYNE Y. MALIKSI
C-25460
EX. 02/28/17
STATE OF CALIFORNIA

NO.	DATE	ISSUE
	GTM	1-13-2016 ISSUE FOR PLANNING

ALL DRAWINGS AND MATERIALS APPEARING HEREIN CONSTITUTE THE ORIGINAL AND UNPUBLISHED WORK OF THE ARCHITECT AND MAY NOT BE DUPLICATED, USED OR DISCLOSED WITHOUT THE PRIOR WRITTEN CONSENT OF THE ARCHITECT.
© 2015 JM MALIKSI & ASSOCIATES

DRAWING TITLE

NEIGHBORHOOD CONTEXT PHOTOS

SCALE: N.T.S.
PROJECT NAME: MCGREGOR
CADD FILE NO.
DRAWING NO.

A-0.3

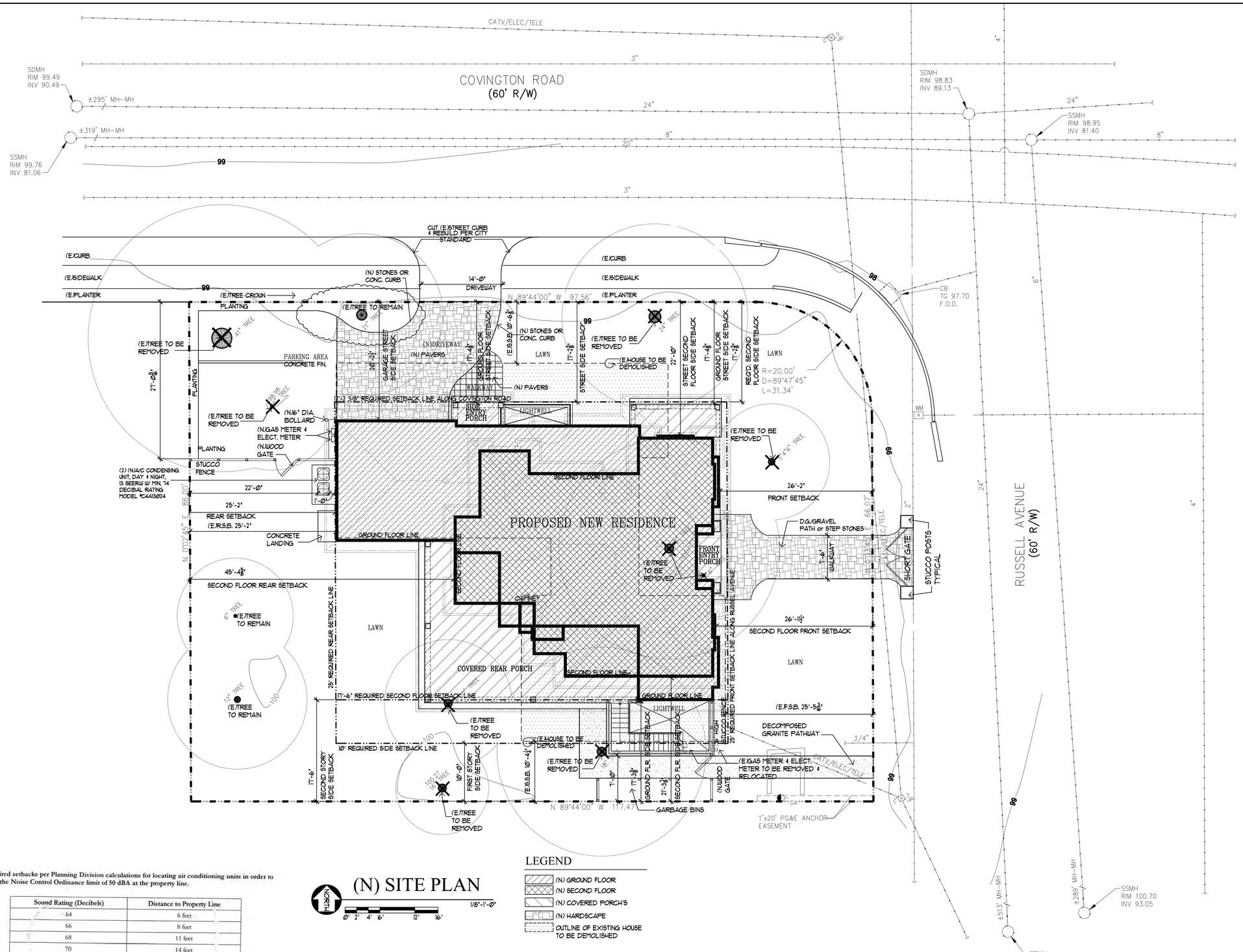

Required setbacks per Planning Division calculations for locating air conditioning units in order to meet the Noise Control Ordinance limit of 50 dBA at the property line.

Sound Rating (Decibels)	Distance to Property Line
64	6 feet
66	8 feet
68	11 feet
70	14 feet
72	18 feet
74	22 feet

Notes:

1. Air conditioning equipment must maintain a minimum setback of five-foot from a property line.
2. If the air conditioning unit is later determined by the City to exceed the limits of the noise ordinance, it must be relocated, replaced, or otherwise modified to achieve compliance with the Noise Ordinance.

(N) SITE PLAN

NORTH

1/8"=1'-0"

0' 2' 4' 6' 12' 16'

LEGEND

- (N) GROUND FLOOR
- (N) SECOND FLOOR
- (N) COVERED PORCH'S
- (N) HARDSCAPE
- OUTLINE OF EXISTING HOUSE TO BE DEMOLISHED

PROJECT TITLE & LOCATION

NEW RESIDENCE FOR

Patrick & Melissa McGregor

1014 RUSSELL AVENUE
LOS ALTOS, CA 94024

REVISION

J MALIKSI & ASSOC.
ARCHITECTURE & INTERIOR DESIGN

675 MENLO AVENUE
MENLO PARK, CA 94025
TEL. NO. 650 323 2902
FAX NO. 650 323 6433

LICENSED ARCHITECT
LAINE Y. MALIKSI
C-25460
EX. 02/28/17
STATE OF CALIFORNIA

NO.	DATE	ISSUE
GTM	2-25-2016	ISSUE FOR PLANNING
RAF	1-13-2016	FOR PLAN REVIEW
RAF	1-07-2016	DD

ALL DRAWINGS AND MATERIALS APPEARING HEREIN CONSTITUTE THE ORIGINAL AND UNPUBLISHED WORK OF THE ARCHITECT AND MAY NOT BE DUPLICATED, USED OR DISCLOSED WITHOUT THE PRIOR WRITTEN CONSENT OF THE ARCHITECT.
© 2015 JM MALIKSI & ASSOCIATES

DRAWING TITLE

(N) SITE PLAN

SCALE: 1/8" = 1'-0"
PROJECT NAME: MCGREGOR
CADD FILE NO.
DRAWING NO.

A-1.1

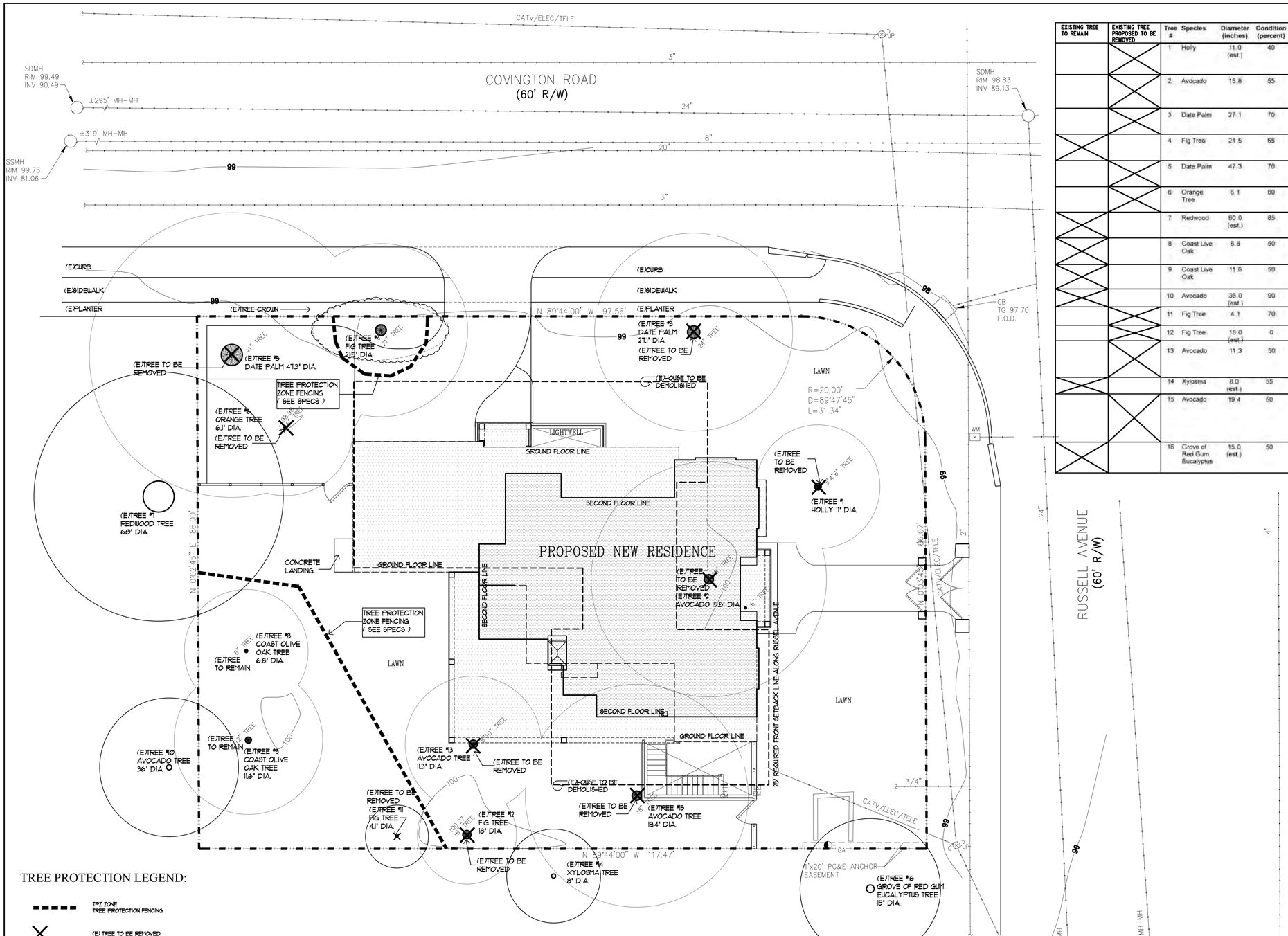

EXISTING TREE TO REMAIN	EXISTING TREE PROPOSED TO BE REMOVED	Tree #	Species	Diameter (inches)	Condition (percent)	Height (feet)	Spread (feet)	Comments
	X	1	Holly	11.0 (est.)	40	18	12	Three-stem at the base with included bark between the stems; drought-stressed canopy; abundance of interior deadwood.
	X	2	Avocado	15.8	55	25	30	50% of root zone is covered by the home; slight lean to the east; tip dieback present; moderate amount of deadwood present.
	X	3	Date Palm	27.1	70	30	18	Large base; several small saplings growing out of the trunk; abundance of dead seed pods and fronds.
X		4	Fig Tree	21.5	65	20	24	Moderate amount of deadwood; excess end weight on eastern growing limb; pollarded in the past.
	X	5	Date Palm	47.3	70	45	21	Abundance of dead seed pods and fronds; saplings growing out of the trunk; large base.
	X	6	Orange Tree	6.1	60	12	12	Slight lean to the north; good vigor; three-stem at 3 feet; measured below the three-stem attachment.
X		7	Redwood	80.0 (est.)	85	90	39	Located on the neighbor's property; two-stem at the base with included bark long lateral limbs good vigor.
X		8	Coast Live Oak	6.8	50	20	15	Abundance of ivy around the base; leans to the northeast; suppressed by neighbor's Redwood tree.
X		9	Coast Live Oak	11.6	50	35	27	Root-crown covered by ivy; leans to the northeast; healthy canopy; codominant at 9 feet.
X		10	Avocado	36.0 (est.)	90	90	36	Located on the neighbor's property; good form and vigor.
	X	11	Fig Tree	4.1	70	15	9	Root crown covered; mushrooms present around the base; good form
	X	12	Fig Tree	18.0 (est.)	0	10	6	Dead.
	X	13	Avocado	11.3	50	20	27	Two-stem at base, larger stem has significant decay; healthy canopy; some sunscald present; tip dieback present; root crown covered.
X		14	Xylosma	8.0 (est.)	55	18	18	Healthy canopy; located near the fence; on neighbor's property.
	X	15	Avocado	19.4	50	40	30	Located near the home; several areas of decay present on the trunk; codominant at 7 feet; roots may be affecting the home; 50% of the root zone is covered by the home; healthy upper canopy.
X		16	Grove of Red Gum Eucalyptus	15.0 (est.)	50	40	42	Located on the neighbor's property; healthy canopies; poor form; several codominant attachments in their canopies.

TREE PROTECTION LEGEND:

- TPZ ZONE — TREE PROTECTION FENCING
- (E) TREE TO BE REMOVED

TREE PROTECTION SPECIFICATIONS

1. A PROTECTIVE BARRIER OF 6-FOOT CHAIN LINK FENCING SHALL BE INSTALLED AROUNF THE DRIPLINE OF PROTECTED TREE(S). THE FENCING CAN BE MOVED WITHIN THE DRIPLINE IF AUTHORIZED BY THE PROJECT ARBORIST OR THE CITY ARBORIST, BUT NOT CLOSER THAN 2 FEET FROM THE TRUNK OF ANY TREE. FENCE POSTS SHALL BE 15 INCHES IN DIAMETER AND ARE TO BE DRIVEN 2 FEET INTO THE GROUND. THE DISTANCE BETWEEN POSTS SHALL NOT BE MORE THAN 10 FEET. THIS ENCLOSED AREA IS THE TREE PROTECTION ZONE (TPZ).

2. MOVABLE BARRIERS OF CHAIN LINK FENCING SECURED TO CEMENT BLOCKS CAN BE SUBSTITUTED FOR 'FIXED' FENCING IF THE PROJECT ARBORIST AND CITY ARBORIST AGREE THAT THE FENCING WILL HAVE TO BE MOVED TO ACCOMMODATE CERTAIN PHASES OF CONSTRUCTION. THE BUILDER MAY NOT MOVE THE FENCE WITHOUT ATHORIZATION FROM THE PROJECT ARBORIST OR CITY ARBORIST.

NORTH

TREE PROTECTION PLAN

1/8"=1'-0"

0' 2' 4' 6' 12' 16'

LEGEND

- (N) GROUND FLOOR
- (N) SECOND FLOOR

PROJECT TITLE & LOCATION

NEW RESIDENCE FOR

Patrick & Melissa McGregor

1014 RUSSELL AVENUE
LOS ALTOS, CA 94024

REVISION

J MALIKSI & ASSOC.
ARCHITECTURE ▫ INTERIOR DESIGN

675 MENLO AVENUE
MENLO PARK, CA 94025
TEL. NO. 650 323 2902
FAX NO. 650 323 6433

LICENSED ARCHITECT JAYNE Y. MALIKSI C-25460 EX. 02/28/17 STATE OF CALIFORNIA

NO.	DATE	ISSUE
GTM	2-25-2016	ISSUE FOR PLANNING
RAF	1-13-2016	FOR PLAN REVIEW
RAF	1-07-2016	DD

ALL DRAWINGS AND MATERIALS APPEARING HEREIN CONSTITUTE THE ORIGINAL AND UNPUBLISHED WORK OF THE ARCHITECT AND MAY NOT BE DUPLICATED, USED OR DISCLOSED WITHOUT THE PRIOR WRITTEN CONSENT OF THE ARCHITECT.
© 2015 JM MALIKSI & ASSOCIATES

DRAWING TITLE

TREE PROTECTION PLAN

SCALE: 1/8" = 1'-0"
PROJECT NAME: MCGREGOR
CADD FILE NO.
DRAWING NO.

A-1.2

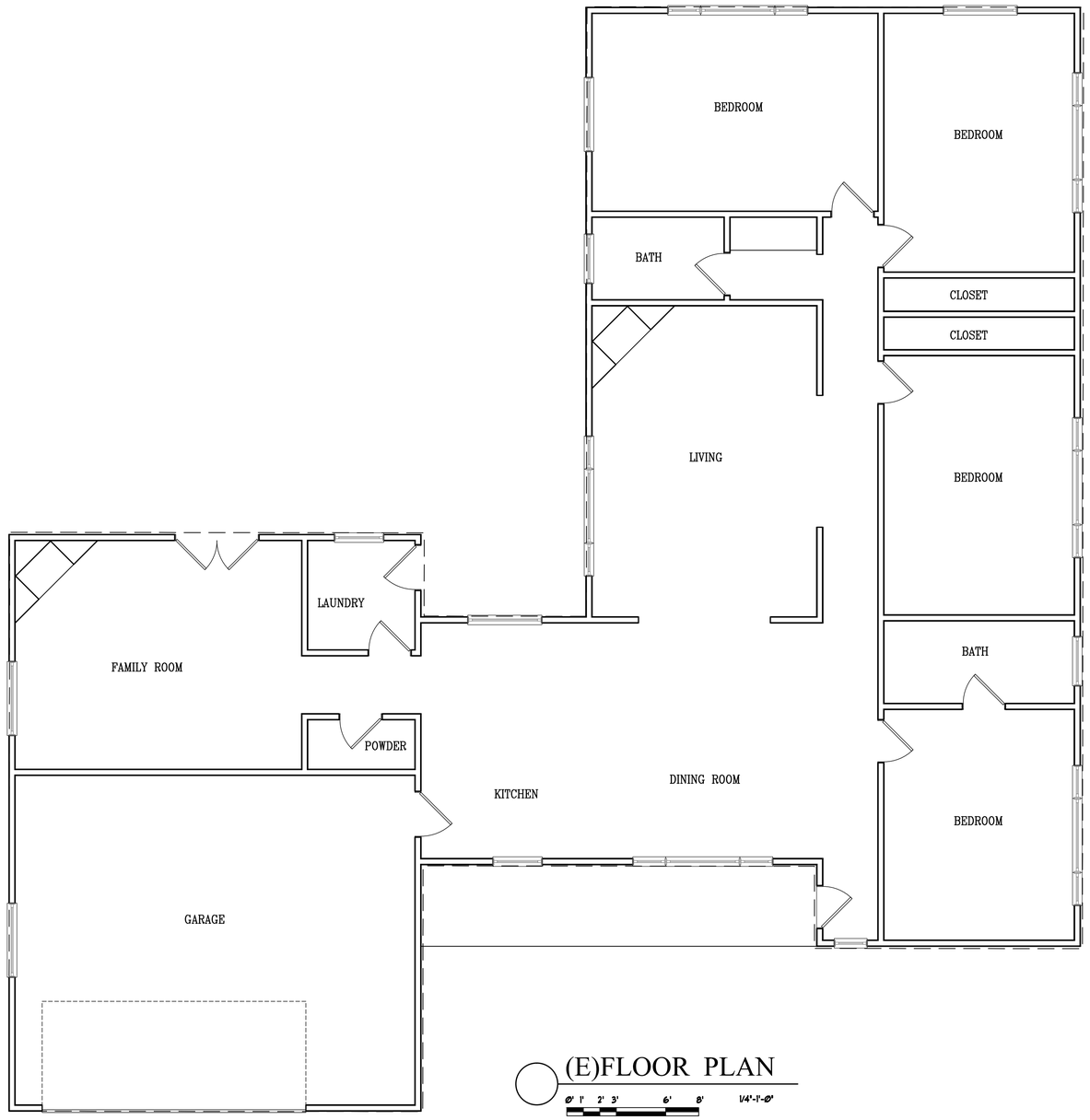

(E)FLOOR PLAN

0' 1' 2' 3' 6' 8' 1/4"=1'-0"

PROJECT TITLE & LOCATION

NEW RESIDENCE FOR

Patrick & Melissa McGregor

1014 RUSSELL AVENUE
LOS ALTOS, CA 94024

REVISION

J MALIKSI & ASSOC.
ARCHITECTURE & INTERIOR DESIGN

675 MENLO AVENUE
MENLO PARK, CA 94025
TEL. NO. 650 323 2902
FAX NO. 650 323 6433

LICENSED ARCHITECT
JAIME Y. MALIKSI
C-25460
EX. 02/28/17
STATE OF CALIFORNIA

NO.	DATE	ISSUE
GTM	2-25-2016	ISSUE FOR PLANNING
RAF	1-13-2016	FOR PLAN REVIEW

ALL DRAWINGS AND MATERIALS APPEARING HEREIN CONSTITUTE THE ORIGINAL AND UNPUBLISHED WORK OF THE ARCHITECT AND MAY NOT BE DUPLICATED, USED OR DISCLOSED WITHOUT THE PRIOR WRITTEN CONSENT OF THE ARCHITECT.
(C) 2015 J.M. MALIKSI & ASSOCIATES

DRAWING TITLE

(E)FLOOR PLAN

SCALE: 1/4" = 1'-0"
PROJECT NAME: MCGREGOR
CADD FILE NO.
DRAWING NO.

A-1.3

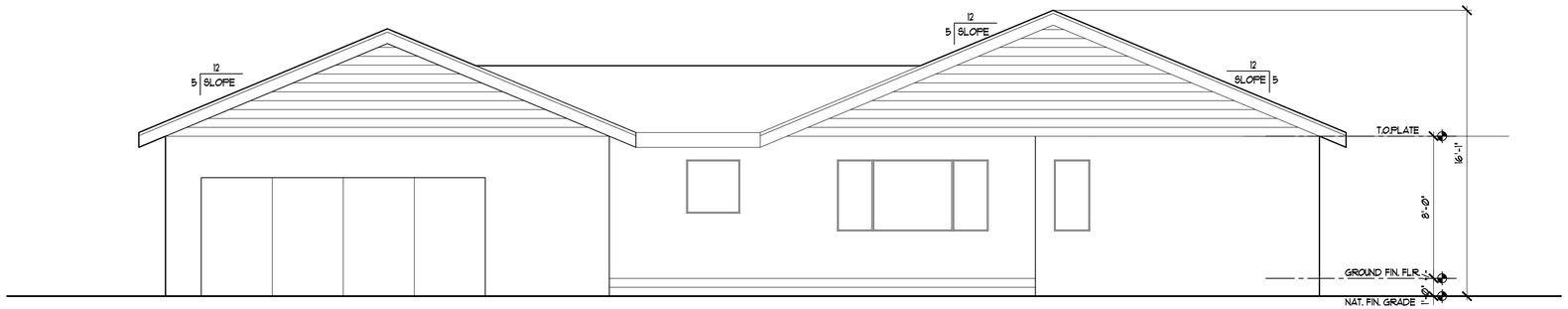

(E)FRONT ELEVATION

1/4"=1'-0"

0' 1' 2' 3' 6' 8'

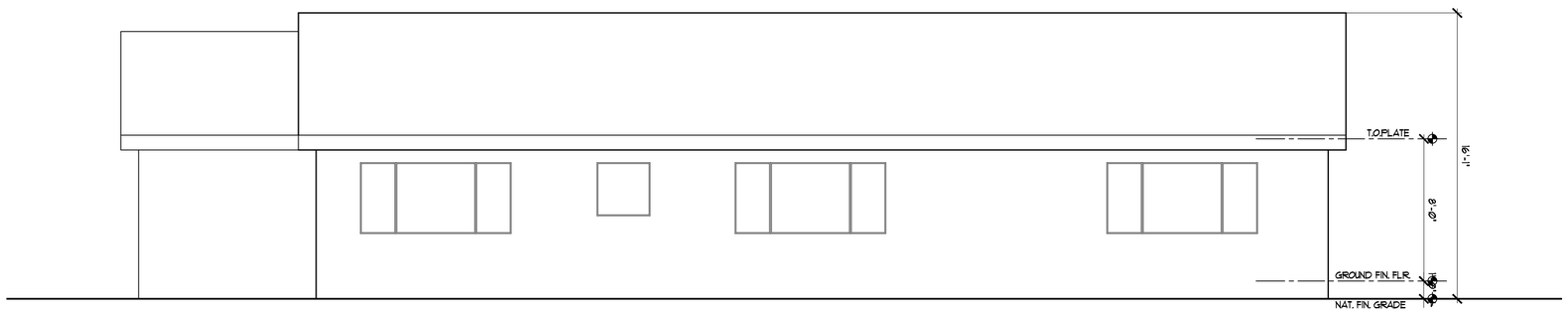

(E)RIGHT SIDE ELOVATION

1/4"=1'-0"

0' 1' 2' 3' 6' 8'

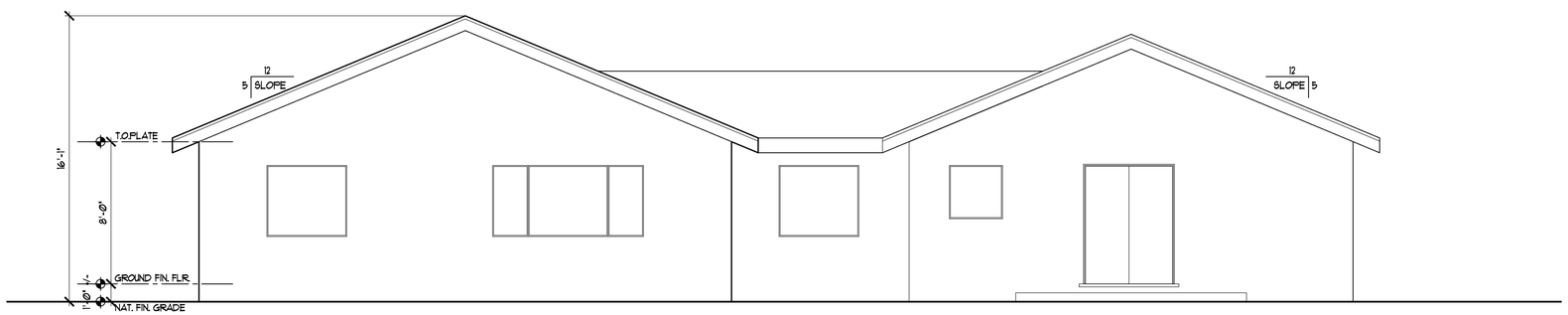

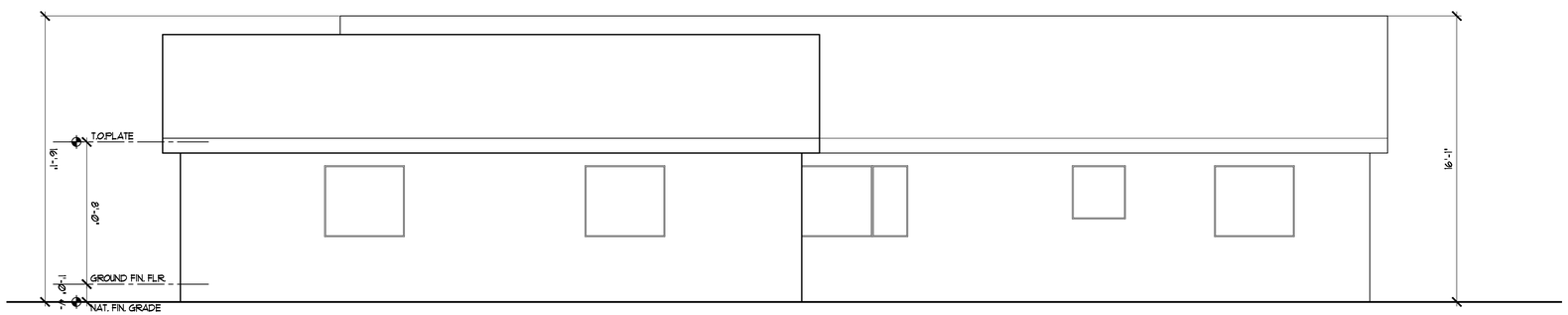

(E)LEFT SIDE ELEVATION

1/4"=1'-0"

0' 1' 2' 3' 6' 8'

PROJECT TITLE & LOCATION

NEW RESIDENCE FOR

Patrick & Melissa McGregor

1014 RUSSELL AVENUE
LOS ALTOS, CA 94024

REVISION

J MALIKSI & ASSOC.
ARCHITECTURE ▫ INTERIOR DESIGN

675 MENLO AVENUE
MENLO PARK, CA 94025
TEL. NO. 650 323 2902
FAX NO. 650 323 6433

LICENSED ARCHITECT
JAIME T. MALIKSI
C-25460
EX. 02/28/17
STATE OF CALIFORNIA

NO.	DATE	ISSUE
GTM	2-25-2016	ISSUE FOR PLANNING
RAF	1-13-2016	FOR PLAN REVIEW

ALL DRAWINGS AND MATERIALS APPEARING HEREIN CONSTITUTE THE ORIGINAL AND UNPUBLISHED WORK OF THE ARCHITECT AND MAY NOT BE DUPLICATED, USED OR DISCLOSED WITHOUT THE PRIOR WRITTEN CONSENT OF THE ARCHITECT.
© 2015 JM MALIKSI & ASSOCIATES

DRAWING TITLE

(E)ELEVATIONS

SCALE: 1/4" = 1'-0"
PROJECT NAME: MCGREGOR
CADD FILE NO.
DRAWING NO.

A-1.4

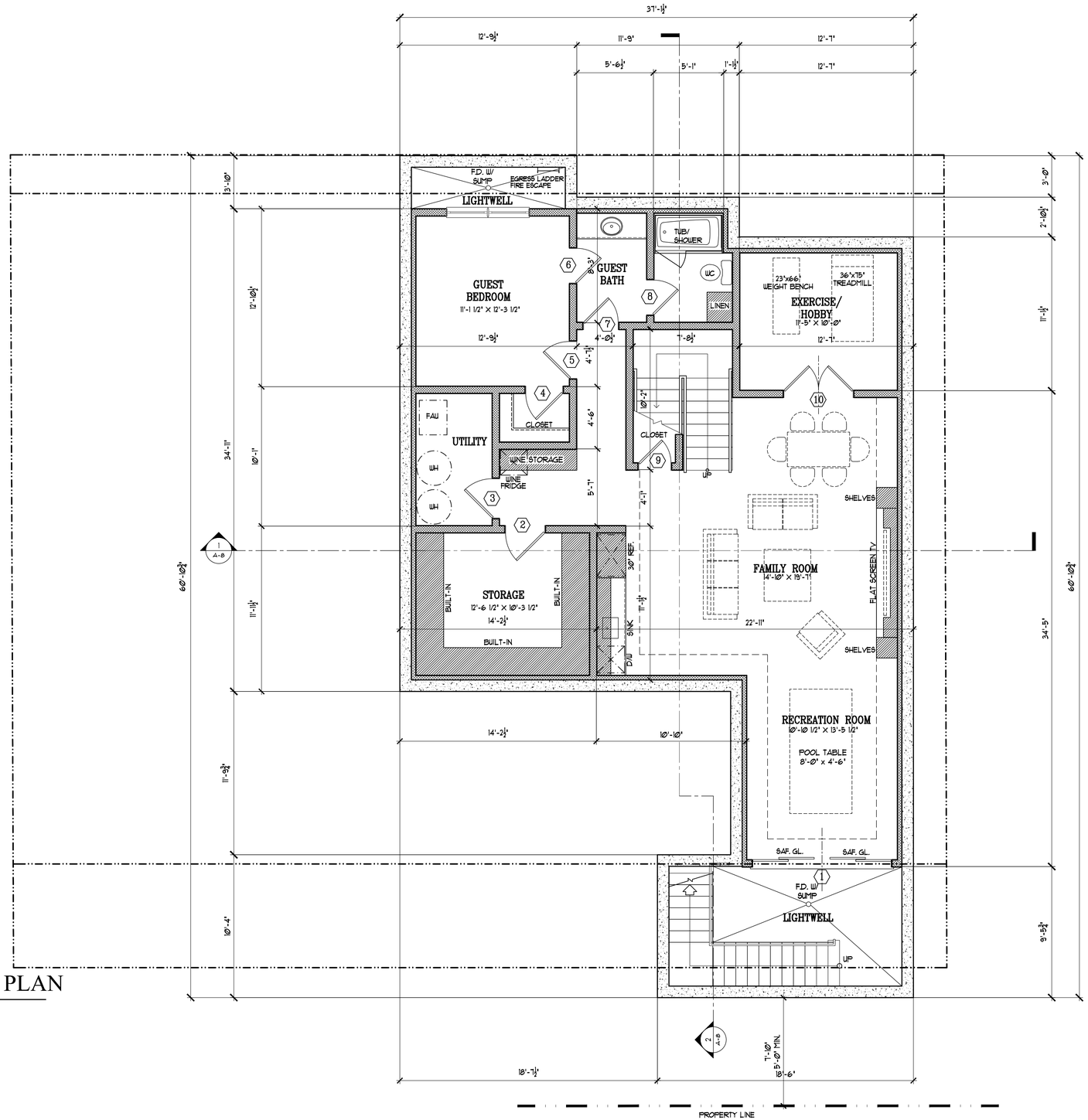

(N) BASEMENT FLOOR PLAN

NORTH

0' 1' 2' 3' 6' 8'

BASEMENT FLOOR AREA: 1,448.21 S.F.

LIGHTWELLS: 228.37 S.F.

PROJECT TITLE & LOCATION

NEW RESIDENCE FOR

Patrick & Melissa McGregor

1014 RUSSELL AVENUE
LOS ALTOS, CA 94024

REVISION

J MALIKSI & ASSOC.
ARCHITECTURE ▫ INTERIOR DESIGN

675 MENLO AVENUE
MENLO PARK, CA 94025
TEL. NO. 650 323 2902
FAX NO. 650 323 6433

LICENSED ARCHITECT JAIME T. MALIKSI C-25460 EX. 02/28/17 STATE OF CALIFORNIA

NO.	DATE	ISSUE
GTM	2-25-2016	ISSUE FOR PLANNING
RAF	1-13-2016	FOR PLAN REVIEW
RAF	1-07-2016	DD

ALL DRAWINGS AND MATERIALS APPEARING HEREIN CONSTITUTE THE ORIGINAL AND UNPUBLISHED WORK OF THE ARCHITECT AND MAY NOT BE DUPLICATED, USED OR DISCLOSED WITHOUT THE PRIOR WRITTEN CONSENT OF THE ARCHITECT.
© 2015 JM MALIKSI & ASSOCIATES

DRAWING TITLE

(N) BASEMENT FLOOR PLAN

SCALE: 1/4" = 1'-0"

PROJECT NAME: MCGREGOR

CADD FILE NO.

DRAWING NO.

A-2.1

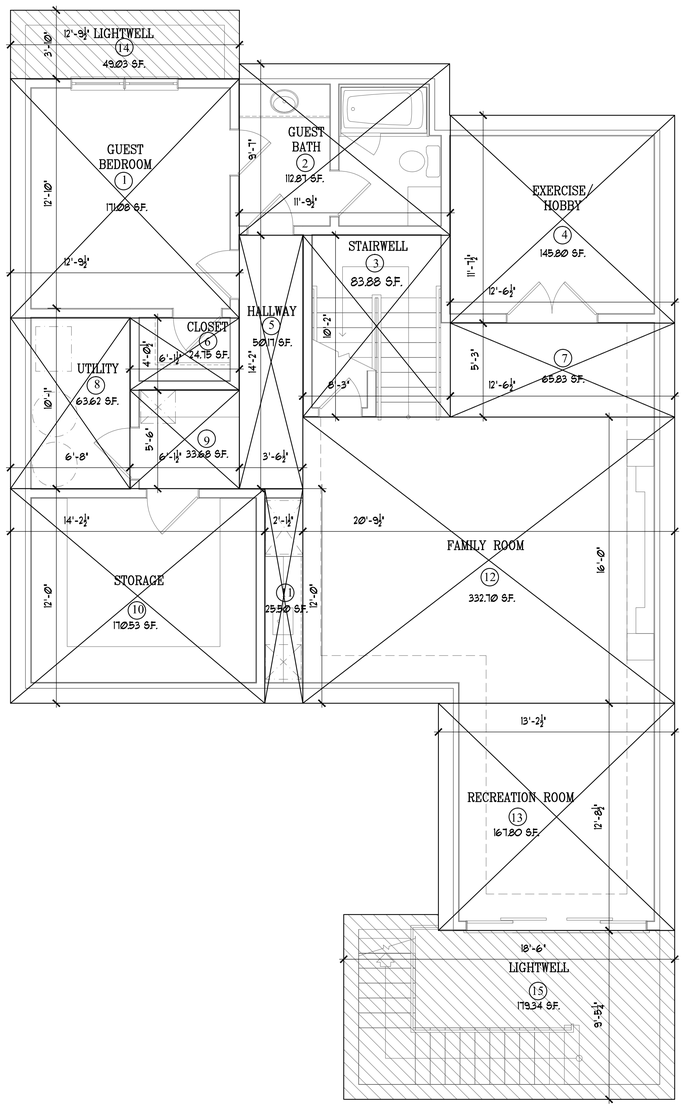

BASEMENT FLOOR BLOCK-OUT AREA CALCULATIONS DIAGRAM

SCALE 1/4"=1'-0"

0' 1' 2' 3' 6' 8'

LEGEND :

BASEMENT CONDITIONED FLOOR AREA: 1,448.21 S.F.

LIGHTWELLS: 228.37 S.F.

(FAR) FLOOR AREA RATIO CALCULATIONS

SECTION	LOCATION	AREA
BASEMENT FLOOR (DOES NOT COUNT TOWARDS FAR)		
1	GUEST ROOM	171.08 S.F.
2	GUEST BATH	112.87 S.F.
3	STAIRWELL	83.88 S.F.
4	EXERCISE ROOM	145.80 S.F.
5	HALLWAY	50.17 S.F.
6	CLOSET	24.75 S.F.
7	FAMILY ROOM	65.83 S.F.
7	UTILITY	63.62 S.F.
9	HALLWAY	33.68 S.F.
10	STORAGE	170.53 S.F.
11	FAMILY ROOM	25.50 S.F.
12	FAMILY ROOM	332.70 S.F.
13	RECREATION ROOM	167.80 S.F.
TOTAL BASEMENT CONDITIONED FLOOR AREA :		**1448.21 S.F.**
14	LIGHTWELLS	49.03 S.F.
15	LIGHTWELLS	179.34 S.F.
TOTAL BASEMENT LIGHTWELL AREA :		**228.37 S.F.**

(FAR) FLOOR AREA RATIO CALCULATIONS

SECTION	LOCATION	AREA
GROUND FLOOR		
16	GARAGE	444.51 S.F.
17	MUDROOM/LAUNDRY	104.10 S.F.
18	BREAKFAST	62.46 S.F.
19	KITCHEN	312.47 S.F.
20	BUTLERS/PANTRY	67.44 S.F.
21	STAIRWELL	79.65 S.F.
22	DINING ROOM	213.90 S.F.
23	BOX-OUT WINDOW	9.08 S.F.
24	FAMILY ROOM	53.24 S.F.
25	FAMILY ROOM	213.59 S.F.
26	FOYER	131.25 S.F.
27	POWDER ROOM	58.64 S.F.
28	LIVING ROOM	111.34 S.F.
29	OFFICE/DEN	168.36 S.F.
30	BOX-OUT WINDOW	9.08 S.F.
TOTAL GROUND FLOOR AREA SUBTOTAL:		**2039.11 S.F.**
SECOND FLOOR		
31	MASTER BATH	35.25 S.F.
32	MASTER BATH	98.51 S.F.
33	MASTER W.I.C.	74.07 S.F.
34	STAIRWELL	83.27 S.F.
35	BOX-OUT WINDOW	2.19 S.F.
36	BEDROOM 1	81.40 S.F.
37	BEDROOM 1	2.19 S.F.
38	BEDROOM 1	86.41 S.F.
39	CLOSET	26.60 S.F.
40	BEDROOM 1 HALL	17.28 S.F.
41	HALLWAY	27.77 S.F.
42	BATH 1	66.74 S.F.
43	HALLWAY	43.06 S.F.
44	MASTER BEDROOM HALLWAY	26.40 S.F.
45	MASTER W.I.C.	58.51 S.F.
46	BEDROOM 2 CLOSET + HALLWAY	40.07 S.F.
47	BEDROOM 3 HALLWAY	17.28 S.F.
48	BEDROOM 3 CLOSET	26.59 S.F.
49	MASTER BEDROOM	266.45 S.F.
50	BATH 2	48.60 S.F.
51	BEDRROM 2	159.88 S.F.
52	BEDROOM 3	166.78 S.F.
53	BOX-OUT WINDOW	2.19
TOTAL SECOND FLOOR AREA SUBTOTAL :		**1459.49 S.F.**
TOTAL FLOOR AREA :		**3498.60 S.F.**
54	COVERED FRONT PORCH DOES NOT COUNT TOWARDS	20.94 S.F.
55	COVERED FRONT PORCH DOES NOT COUNT TOWARDS	12.60 S.F.
56	COVERED SIDE PORCH DOES NOT COUNT TOWARDS	31.56 S.F.
57	COVERED REAR PORCH DOES NOT COUNT TOWARDS	11.88 S.F.
58	COVERED REAR PORCH DOES NOT COUNT TOWARDS	157.54 S.F.
59	COVERED REAR PORCH DOES NOT COUNT TOWARDS	231.96 S.F.
60	COVERED REAR PORCH DOES NOT COUNT TOWARDS	60.93 S.F.
61	COVERED REAR PORCH DOES NOT COUNT TOWARDS	159.62 S.F.
62	FIREPLACE DOES NOT COUNT TOWARDS	13.27 S.F.
TOTAL GROUND FLOOR PORCHES SUBTOTAL:		**700.30 S.F.**
TOTAL GROUND FLOOR AREA SUBTOTAL:		**2039.11 S.F.**
TOTAL LOT COVERAGE		**2739.41 S.F.**

BASEMENT FLOOR AREA CALCULATION

PROJECT TITLE & LOCATION

NEW RESIDENCE FOR

Patrick & Melissa McGregor

1014 RUSSELL AVENUE
LOS ALTOS, CA 94024

REVISION

J MALIKSI & ASSOC.
ARCHITECTURE & INTERIOR DESIGN

675 MENLO AVENUE
MENLO PARK, CA 94025

TEL. NO. 650 323 2902
FAX NO. 650 323 6433

LICENSED ARCHITECT
JAIME T. MALIKSI
C-25460
EX. 02/28/17
STATE OF CALIFORNIA

NO.	DATE	ISSUE
GTM	2-25-2016	ISSUE FOR PLANNING
RAF	1-13-2016	FOR PLAN REVIEW
RAF	1-07-2016	DD

ALL DRAWINGS AND MATERIALS APPEARING HEREIN CONSTITUTE THE ORIGINAL AND UNPUBLISHED WORK OF THE ARCHITECT AND MAY NOT BE DUPLICATED, USED OR DISCLOSED WITHOUT THE PRIOR WRITTEN CONSENT OF THE ARCHITECT.
© 2015 JM MALIKSI & ASSOCIATES.

DRAWING TITLE

BASEMENT FLOOR BLOCK-OUT AREA CALCS. DIAGRAM

SCALE: 1/4" = 1'-0"
PROJECT NAME: MCGREGOR
CADD FILE NO.
DRAWING NO.

A-2.2

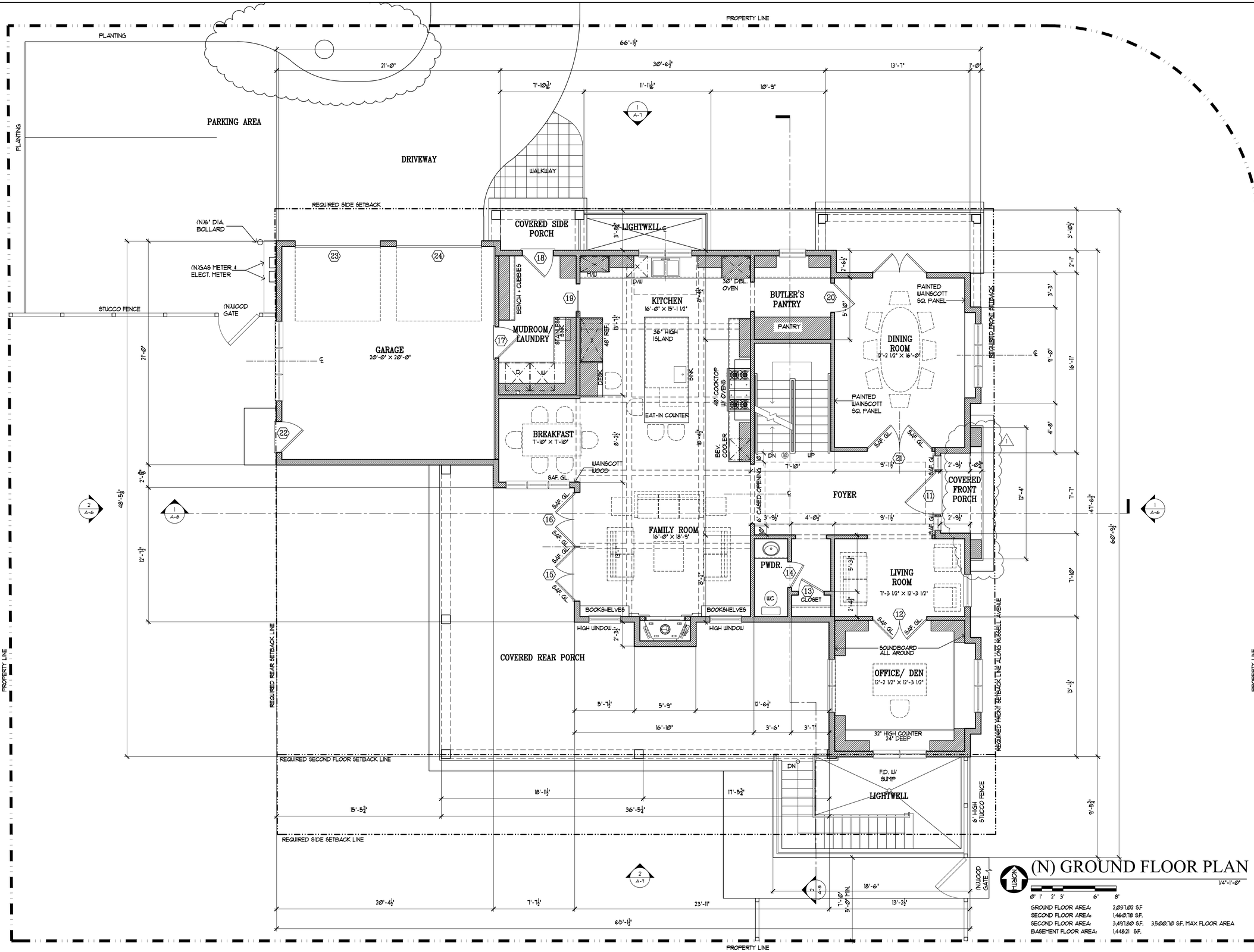

(N) GROUND FLOOR PLAN

GROUND FLOOR AREA:	2,037.02 S.F.	
SECOND FLOOR AREA:	1,460.78 S.F.	
SECOND FLOOR AREA:	3,497.80 S.F.	3,500.10 S.F. MAX FLOOR AREA
BASEMENT FLOOR AREA:	1,448.21 S.F.	

PROJECT TITLE & LOCATION

NEW RESIDENCE FOR

Patrick & Melissa McGregor

1014 RUSSELL AVENUE
LOS ALTOS, CA 94024

REVISION

J MALIKSI & ASSOC.
ARCHITECTURE ▫ INTERIOR DESIGN

675 MENLO AVENUE
MENLO PARK, CA 94025
TEL. NO. 650 323 2902
FAX NO. 650 323 6433

LICENSED ARCHITECT JAINE T. MALIKSI C-25460 EX. 02/28/17 STATE OF CALIFORNIA

NO.	DATE	ISSUE
GTM	2-25-2016	ISSUE FOR PLANNING
RAF	1-13-2016	FOR PLAN REVIEW
RAF	1-07-2016	DD

ALL DRAWINGS AND MATERIALS APPEARING HEREIN CONSTITUTE THE ORIGINAL AND UNPUBLISHED WORK OF THE ARCHITECT AND MAY NOT BE DUPLICATED, USED OR DISCLOSED WITHOUT THE PRIOR WRITTEN CONSENT OF THE ARCHITECT.
© 2015 JM MALIKSI & ASSOCIATES.

DRAWING TITLE

(N) GROUND FLOOR PLAN

SCALE: 1/4" = 1'-0"
PROJECT NAME: MCGREGOR
CADD FILE NO.
DRAWING NO.

A-3.1

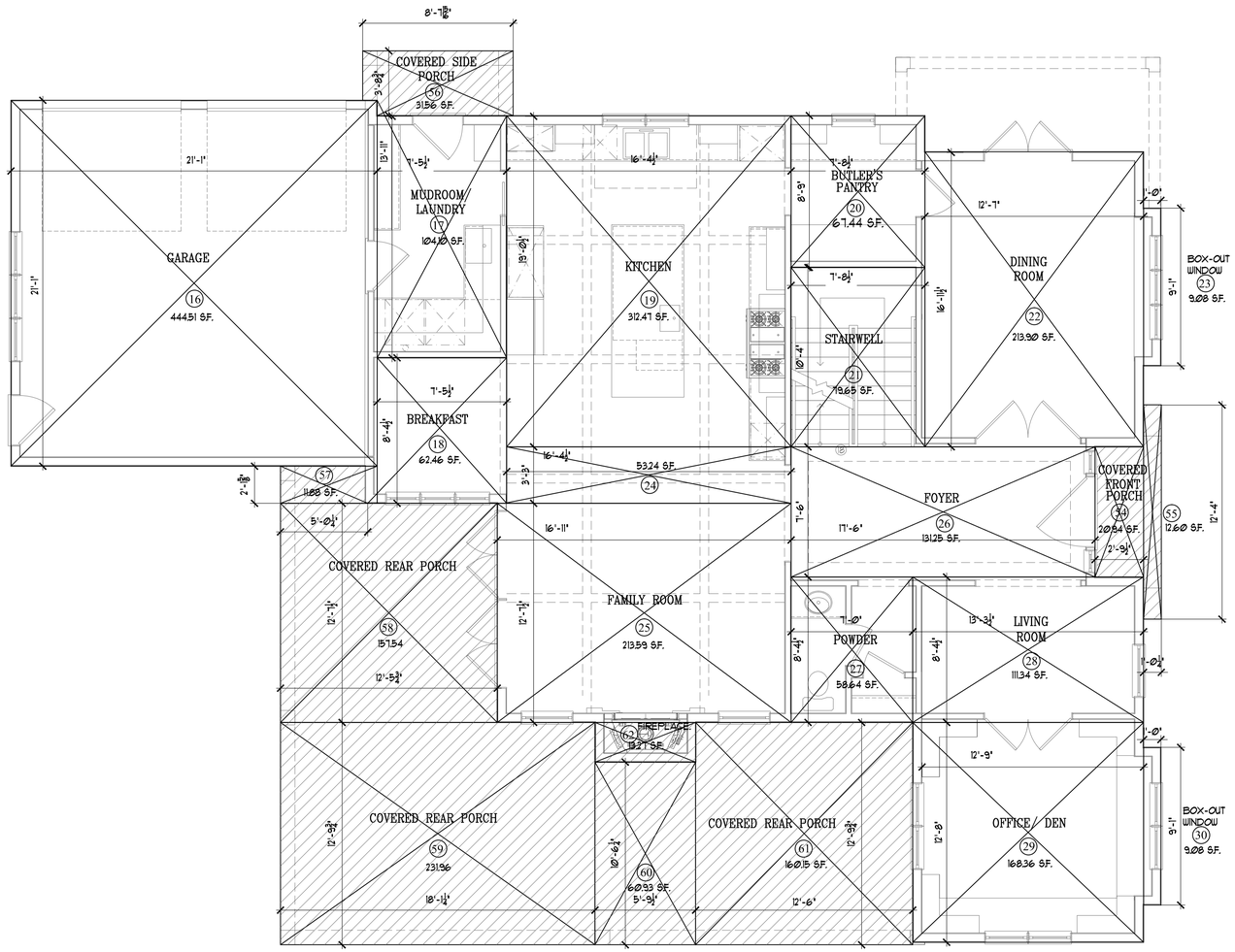

GROUND FLOOR BLOCK-OUT AREA CALCULATIONS DIAGRAM

SCALE 1/4"=1'-0"

0' 1' 2' 3' 6' 8'

LEGEND :

GROUND FLOOR AREA: 2,037.02 S.F.

AREA DOES NOT COUNT TOWARDS FAR 711.34 S.F.

(FAR) FLOOR AREA RATIO CALCULATIONS

SECTION	LOCATION	AREA
BASEMENT FLOOR (DOES NOT COUNT TOWARDS FAR)		
1	GUEST ROOM	171.08 S.F.
2	GUEST BATH	112.87 S.F.
3	STAIRWELL	83.88 S.F.
4	EXERCISE ROOM	145.80 S.F.
5	HALLWAY	50.17 S.F.
6	CLOSET	24.75 S.F.
7	FAMILY ROOM	65.83 S.F.
7	UTILITY	63.62 S.F.
9	HALLWAY	33.68 S.F.
10	STORAGE	170.53 S.F.
11	FAMILY ROOM	25.50 S.F.
12	FAMILY ROOM	332.70 S.F.
13	RECREATION ROOM	167.80 S.F.
TOTAL BASEMENT CONDITIONED FLOOR AREA :		**1448.21 S.F.**
14	LIGHTWELLS	49.03 S.F.
15	LIGHTWELLS	179.34 S.F.
TOTAL BASEMENT LIGHTWELL AREA :		**228.37 S.F.**

(FAR) FLOOR AREA RATIO CALCULATIONS

SECTION	LOCATION	AREA
GROUND FLOOR		
16	GARAGE	444.51 S.F.
17	MUDROOM/LAUNDRY	104.10 S.F.
18	BREAKFAST	62.46 S.F.
19	KITCHEN	312.47 S.F.
20	BUTLERS/PANTRY	67.44 S.F.
21	STAIRWELL	79.65 S.F.
22	DINING ROOM	213.90 S.F.
23	BOX-OUT WINDOW	9.08 S.F.
24	FAMILY ROOM	53.24 S.F.
25	FAMILY ROOM	213.59 S.F.
26	FOYER	131.25 S.F.
27	POWDER ROOM	58.64 S.F.
28	LIVING ROOM	111.34 S.F.
29	OFFICE/DEN	168.36 S.F.
30	BOX-OUT WINDOW	9.08 S.F.
TOTAL GROUND FLOOR AREA SUBTOTAL:		**2039.11 S.F.**
SECOND FLOOR		
31	MASTER BATH	35.25 S.F.
32	MASTER BATH	98.51 S.F.
33	MASTER W.I.C.	74.07 S.F.
34	STAIRWELL	83.27 S.F.
35	BOX-OUT WINDOW	2.19 S.F.
36	BEDROOM 1	81.40 S.F.
37	BEDROOM 1	2.19 S.F.
38	BEDROOM 1	86.41 S.F.
39	CLOSET	26.60 S.F.
40	BEDROOM 1 HALL	17.28 S.F.
41	HALLWAY	27.77 S.F.
42	BATH 1	66.74 S.F.
43	HALLWAY	43.06 S.F.
44	MASTER BEDROOM HALLWAY	26.40 S.F.
45	MASTER W.I.C.	58.51 S.F.
46	BEDROOM 2 CLOSET + HALLWAY	40.07 S.F.
47	BEDROOM 3 HALLWAY	17.28 S.F.
48	BEDROOM 3 CLOSET	26.59 S.F.
49	MASTER BEDROOM	268.45 S.F.
50	BATH 2	48.60 S.F.
51	BEDRROM 2	159.88 S.F.
52	BEDROOM 3	166.78 S.F.
53	BOX-OUT WINDOW	2.19
TOTAL SECOND FLOOR AREA SUBTOTAL :		**1459.49 S.F.**
TOTAL FLOOR AREA :		**3498.60 S.F.**
54	COVERED FRONT PORCH — DOES NOT COUNT TOWARDS	20.94 S.F.
55	COVERED FRONT PORCH — DOES NOT COUNT TOWARDS	12.60 S.F.
56	COVERED SIDE PORCH — DOES NOT COUNT TOWARDS	31.56 S.F.
57	COVERED REAR PORCH — DOES NOT COUNT TOWARDS	11.88 S.F.
58	COVERED REAR PORCH — DOES NOT COUNT TOWARDS	157.54 S.F.
59	COVERED REAR PORCH — DOES NOT COUNT TOWARDS	231.96 S.F.
60	COVERED REAR PORCH — DOES NOT COUNT TOWARDS	60.93 S.F.
61	COVERED REAR PORCH — DOES NOT COUNT TOWARDS	159.62 S.F.
62	FIREPLACE — DOES NOT COUNT TOWARDS	13.27 S.F.
TOTAL GROUND FLOOR PORCHES SUBTOTAL:		**700.30 S.F.**
TOTAL GROUND FLOOR AREA SUBTOTAL:		**2039.11 S.F.**
TOTAL LOT COVERAGE		**2739.41 S.F.**

GROUND FLOOR AREA CALCULATION

PROJECT TITLE & LOCATION

NEW RESIDENCE FOR

Patrick & Melissa McGregor

1014 RUSSELL AVENUE
LOS ALTOS, CA 94024

REVISION

J MALIKSI & ASSOC.
ARCHITECTURE & INTERIOR DESIGN

675 MENLO AVENUE
MENLO PARK, CA 94025
TEL. NO. 650 323 2902
FAX NO. 650 323 6433

LICENSED ARCHITECT JAIME T. MALIKSI C-25460 EX. 02/28/17 STATE OF CALIFORNIA

NO.	DATE	ISSUE
GTM	2-25-2016	ISSUE FOR PLANNING
RAF	1-13-2016	FOR PLAN REVIEW
RAF	1-07-2016	DD

ALL DRAWINGS AND MATERIALS APPEARING HEREIN CONSTITUTE THE ORIGINAL AND UNPUBLISHED WORK OF THE ARCHITECT AND MAY NOT BE DUPLICATED, USED OR DISCLOSED WITHOUT THE PRIOR WRITTEN CONSENT OF THE ARCHITECT.
© 2015 JM MALIKSI & ASSOCIATES

DRAWING TITLE

GROUND FLOOR BLOCK-OUT AREA CALCS. DIAGRAM

SCALE: 1/4" = 1'-0"
PROJECT NAME: MCGREGOR
CADD FILE NO.
DRAWING NO.

A-3.2

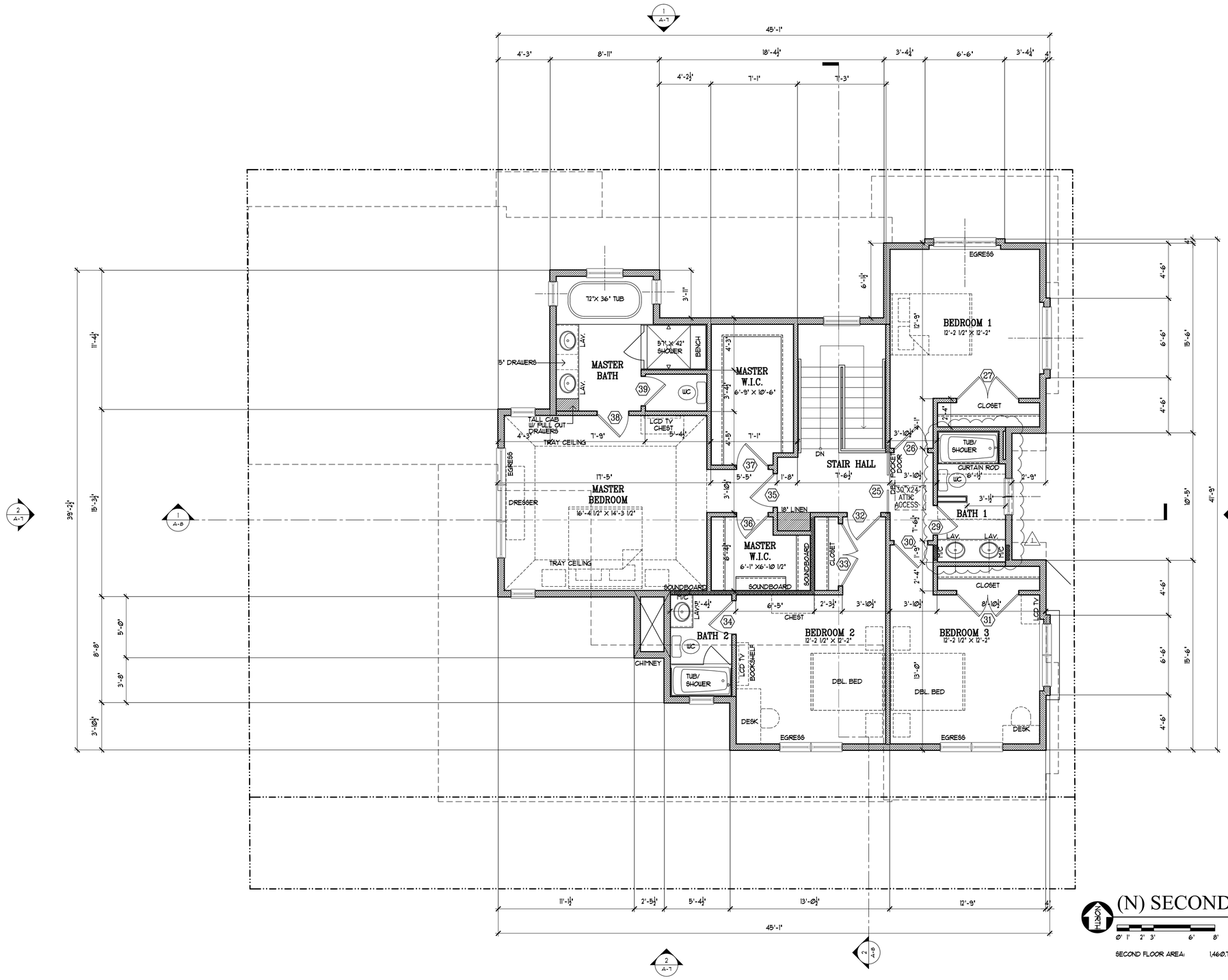

(N) SECOND FLOOR PLAN

1/4"=1'-0"

0' 1' 2' 3' 6' 8'

SECOND FLOOR AREA: 1,460.78 S.F.

PROJECT TITLE & LOCATION

NEW RESIDENCE FOR

Patrick & Melissa McGregor

1014 RUSSELL AVENUE
LOS ALTOS, CA 94024

REVISION

J MALIKSI & ASSOC.
ARCHITECTURE ▫ INTERIOR DESIGN

675 MENLO AVENUE
MENLO PARK, CA 94025
TEL. NO. 650 323 2902
FAX NO. 650 323 6433

LICENSED ARCHITECT JAMES T. MALIKSI C-25460 EX. 02/28/17 STATE OF CALIFORNIA

NO.	DATE	ISSUE
GTM	2-25-2016	ISSUE FOR PLANNING
RAF	1-13-2016	FOR PLAN REVIEW
RAF	1-07-2016	DD

ALL DRAWINGS AND MATERIALS APPEARING HEREIN CONSTITUTE THE ORIGINAL AND UNPUBLISHED WORK OF THE ARCHITECT AND MAY NOT BE DUPLICATED, USED OR DISCLOSED WITHOUT THE PRIOR WRITTEN CONSENT OF THE ARCHITECT.
© 2015 JM MALIKSI & ASSOCIATES

DRAWING TITLE

(N) SECOND FLOOR PLAN

SCALE: 1/4" = 1'-0"
PROJECT NAME: MCGREGOR
CADD FILE NO.
DRAWING NO.

A-4.1

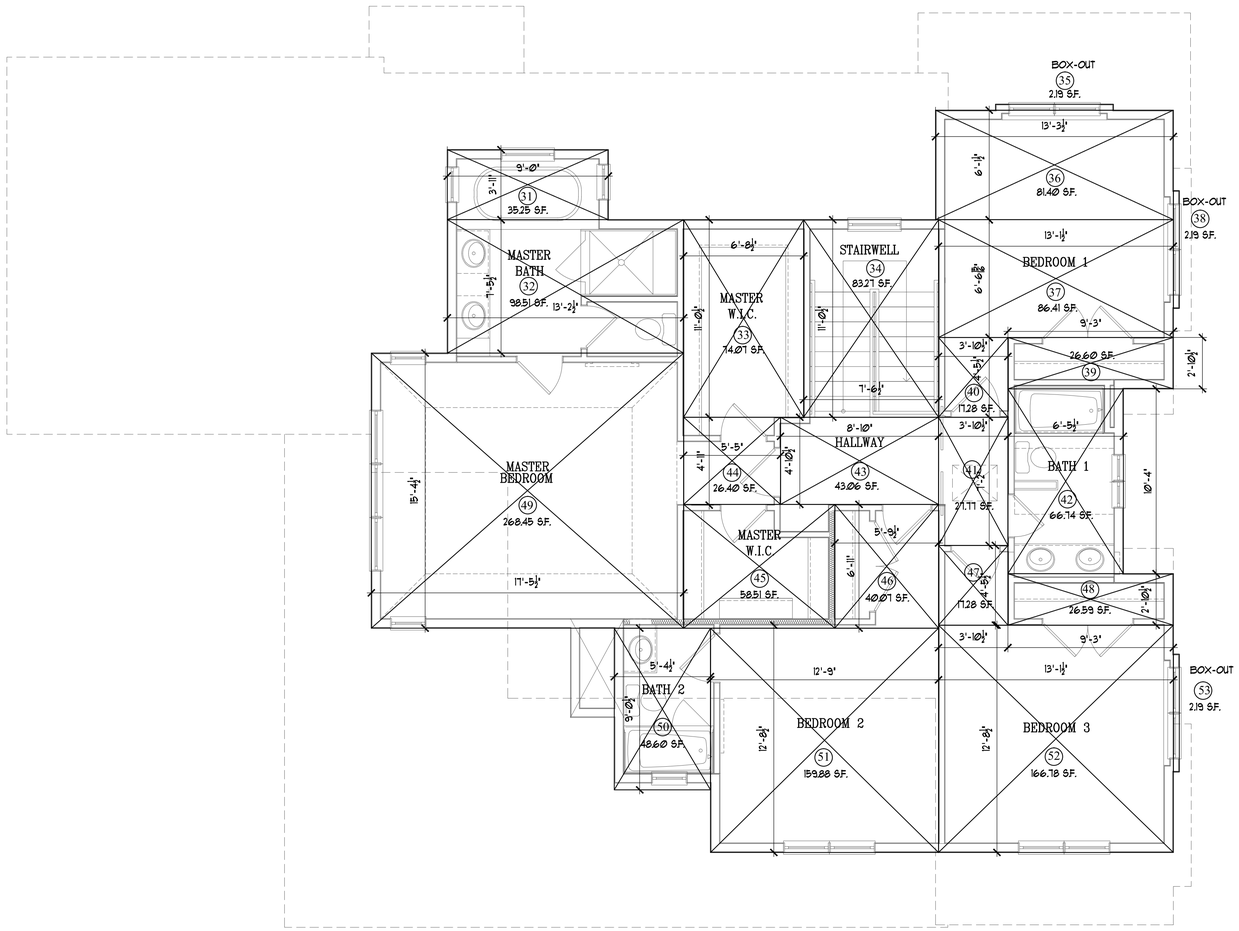

SECOND FLOOR BLOCK-OUT AREA CALCULATIONS DIAGRAM

SCALE 1/4"=1'-0"

0' 1' 2' 3' 6' 8'

LEGEND :

AREA DOES NOT COUNT TOWARDS F.A.L.

AREA DOES NOT COUNT TWICE

(FAR) FLOOR AREA RATIO CALCULATIONS

SECTION	LOCATION	AREA
BASEMENT FLOOR (DOES NOT COUNT TOWARDS FAR)		
1	GUEST ROOM	171.08 S.F.
2	GUEST BATH	112.87 S.F.
3	STAIRWELL	83.88 S.F.
4	EXERCISE ROOM	145.80 S.F.
5	HALLWAY	50.17 S.F.
6	CLOSET	24.75 S.F.
7	FAMILY ROOM	65.83 S.F.
7	UTILITY	63.62 S.F.
9	HALLWAY	33.68 S.F.
10	STORAGE	170.53 S.F.
11	FAMILY ROOM	25.50 S.F.
12	FAMILY ROOM	332.70 S.F.
13	RECREATION ROOM	167.80 S.F.
TOTAL BASEMENT CONDITIONED FLOOR AREA :		**1448.21 S.F.**
14	LIGHTWELLS	49.03 S.F.
15	LIGHTWELLS	179.34 S.F.
TOTAL BASEMENT LIGHTWELL AREA :		**228.37 S.F.**

(FAR) FLOOR AREA RATIO CALCULATIONS

SECTION	LOCATION	AREA
GROUND FLOOR		
16	GARAGE	444.51 S.F.
17	MUDROOM/LAUNDRY	104.10 S.F.
18	BREAKFAST	62.46 S.F.
19	KITCHEN	312.47 S.F.
20	BUTLERS/PANTRY	67.44 S.F.
21	STAIRWELL	79.65 S.F.
22	DINING ROOM	213.90 S.F.
23	BOX-OUT WINDOW	9.08 S.F.
24	FAMILY ROOM	53.24 S.F.
25	FAMILY ROOM	213.59 S.F.
26	FOYER	131.25 S.F.
27	POWDER ROOM	58.64 S.F.
28	LIVING ROOM	111.34 S.F.
29	OFFICE/DEN	168.36 S.F.
30	BOX-OUT WINDOW	9.08 S.F.
TOTAL GROUND FLOOR AREA SUBTOTAL:		**2039.11 S.F.**
SECOND FLOOR		
31	MASTER BATH	35.25 S.F.
32	MASTER BATH	98.51 S.F.
33	MASTER W.I.C.	74.07 S.F.
34	STAIRWELL	83.27 S.F.
35	BOX-OUT WINDOW	2.19 S.F.
36	BEDROOM 1	81.40 S.F.
37	BEDROOM 1	2.19 S.F.
38	BEDROOM 1	86.41 S.F.
39	CLOSET	26.60 S.F.
40	BEDROOM 1 HALL	17.28 S.F.
41	HALLWAY	27.77 S.F.
42	BATH 1	66.74 S.F.
43	HALLWAY	43.06 S.F.
44	MASTER BEDROOM HALLWAY	26.40 S.F.
45	MASTER W.I.C.	58.51 S.F.
46	BEDROOM 2 CLOSET + HALLWAY	40.07 S.F.
47	BEDROOM 3 HALLWAY	17.28 S.F.
48	BEDROOM 3 CLOSET	26.59 S.F.
49	MASTER BEDROOM	268.45 S.F.
50	BATH 2	48.60 S.F.
51	BEDRROM 2	159.88 S.F.
52	BEDROOM 3	166.78 S.F.
53	BOX-OUT WINDOW	2.19
TOTAL SECOND FLOOR AREA SUBTOTAL :		**1459.49 S.F.**
TOTAL FLOOR AREA :		**3498.60 S.F.**
54	COVERED FRONT PORCH — DOES NOT COUNT TOWARDS	20.94 S.F.
55	COVERED FRONT PORCH — DOES NOT COUNT TOWARDS	12.60 S.F.
56	COVERED SIDE PORCH — DOES NOT COUNT TOWARDS	31.56 S.F.
57	COVERED REAR PORCH — DOES NOT COUNT TOWARDS	11.88 S.F.
58	COVERED REAR PORCH — DOES NOT COUNT TOWARDS	157.54 S.F.
59	COVERED REAR PORCH — DOES NOT COUNT TOWARDS	231.96 S.F.
60	COVERED REAR PORCH — DOES NOT COUNT TOWARDS	60.93 S.F.
61	COVERED REAR PORCH — DOES NOT COUNT TOWARDS	159.62 S.F.
62	FIREPLACE — DOES NOT COUNT TOWARDS	13.27 S.F.
TOTAL GROUND FLOOR PORCHES SUBTOTAL:		**700.30 S.F.**
TOTAL GROUND FLOOR AREA SUBTOTAL:		**2039.11 S.F.**
TOTAL LOT COVERAGE		**2739.41 S.F.**

GROUND FLOOR AREA CALCULATION

PROJECT TITLE & LOCATION

NEW RESIDENCE FOR

Patrick & Melissa McGregor

1014 RUSSELL AVENUE
LOS ALTOS, CA 94024

REVISION

J MALIKSI & ASSOC.
ARCHITECTURE & INTERIOR DESIGN

675 MENLO AVENUE
MENLO PARK, CA 94025
TEL. NO. 650 323 2902
FAX NO. 650 323 6433

LICENSED ARCHITECT JAIME T. MALIKSI C-25460 EX. 02/28/17 STATE OF CALIFORNIA

NO.	DATE	ISSUE
GTM	2-25-2016	ISSUE FOR PLANNING
RAF	1-13-2016	FOR PLAN REVIEW
RAF	1-07-2016	DD

ALL DRAWINGS AND MATERIALS APPEARING HEREIN CONSTITUTE THE ORIGINAL AND UNPUBLISHED WORK OF THE ARCHITECT AND MAY NOT BE DUPLICATED, USED OR DISCLOSED WITHOUT THE PRIOR WRITTEN CONSENT OF THE ARCHITECT.
© 2015 JAIME MALIKSI & ASSOCIATES.

DRAWING TITLE

SECOND FLOOR BLOCK-OUT AREA CALCS. DIAGRAM

SCALE: 1/4" = 1'-0"
PROJECT NAME: MCGREGOR
CADD FILE NO.
DRAWING NO.

A-4.2

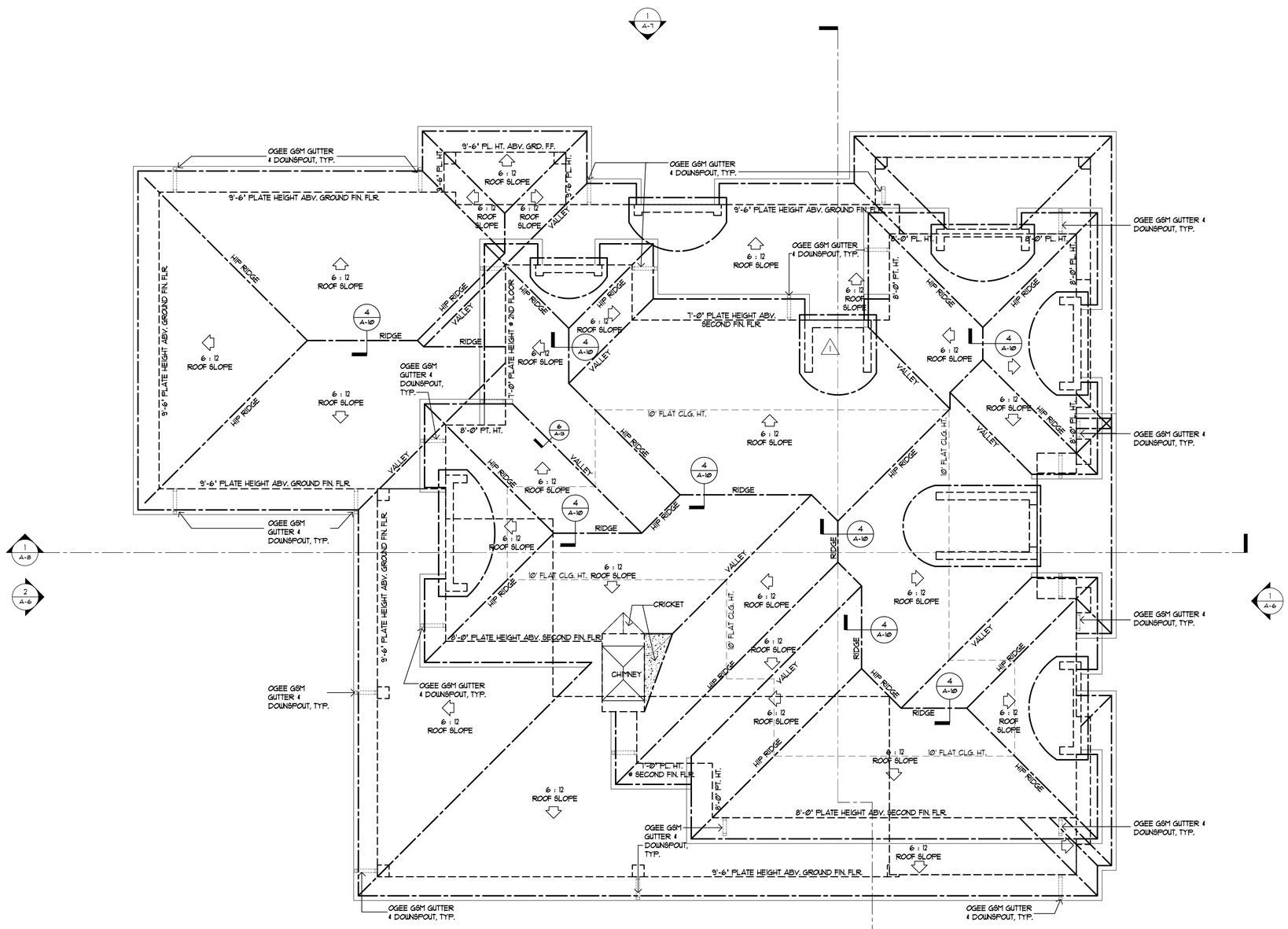

ROOF PLAN

NORTH

1/4"=1'-0"

0' 1' 2' 3' 6' 8'

PROJECT TITLE & LOCATION

NEW RESIDENCE FOR

Patrick & Melissa McGregor

1014 RUSSELL AVENUE
LOS ALTOS, CA 94024

REVISION

J MALIKSI & ASSOC.
ARCHITECTURE ▫ INTERIOR DESIGN

675 MENLO AVENUE
MENLO PARK, CA 94025
TEL. NO. 650 323 2902
FAX NO. 650 323 6433

LICENSED ARCHITECT
JAIME T. MALIKSI
C-25460
EX. 02/28/17
STATE OF CALIFORNIA

NO.	DATE	ISSUE
GTM	2-25-2016	ISSUE FOR PLANNING
RAF	1-13-2016	FOR PLAN REVIEW
RAF	1-07-2016	DD

ALL DRAWINGS AND MATERIALS APPEARING HEREIN CONSTITUTE THE ORIGINAL AND UNPUBLISHED WORK OF THE ARCHITECT AND MAY NOT BE DUPLICATED, USED OR DISCLOSED WITHOUT THE PRIOR WRITTEN CONSENT OF THE ARCHITECT.
© 2015 JM MALIKSI & ASSOCIATES.

DRAWING TITLE

ROOF PLAN

SCALE: 1/4" = 1'-0"
PROJECT NAME: MCGREGOR
CADD FILE NO.
DRAWING NO.

A-5

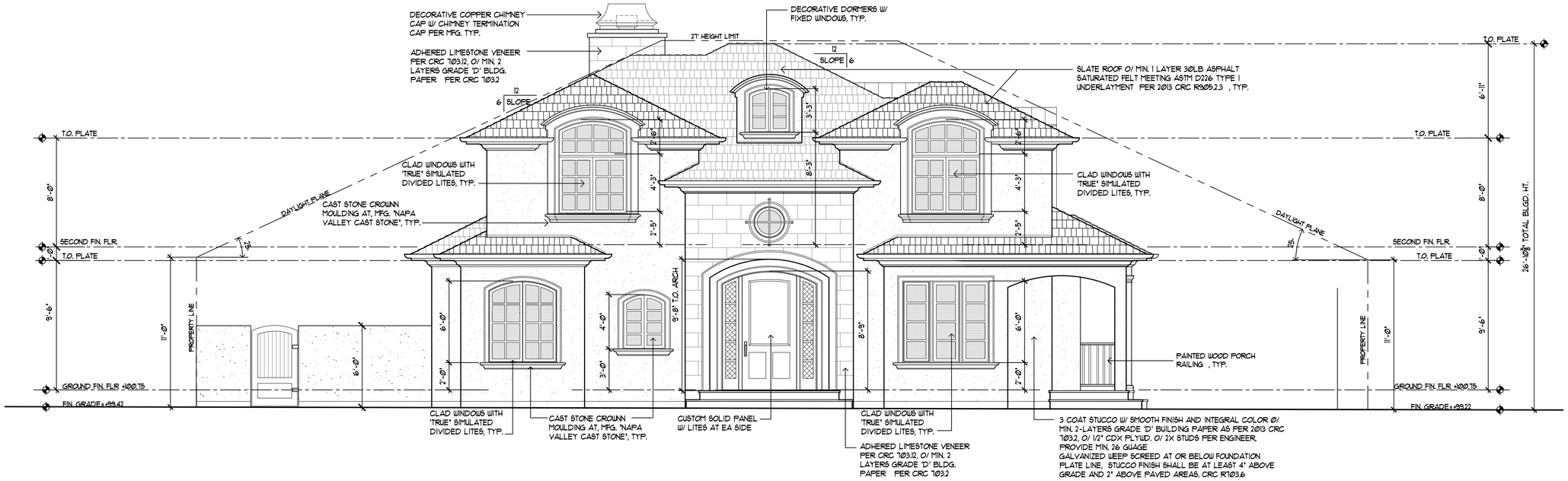

1 FRONT ELEVATION

SCALE 1/4"=1'-0"

0' 1' 2' 3' 6' 8'

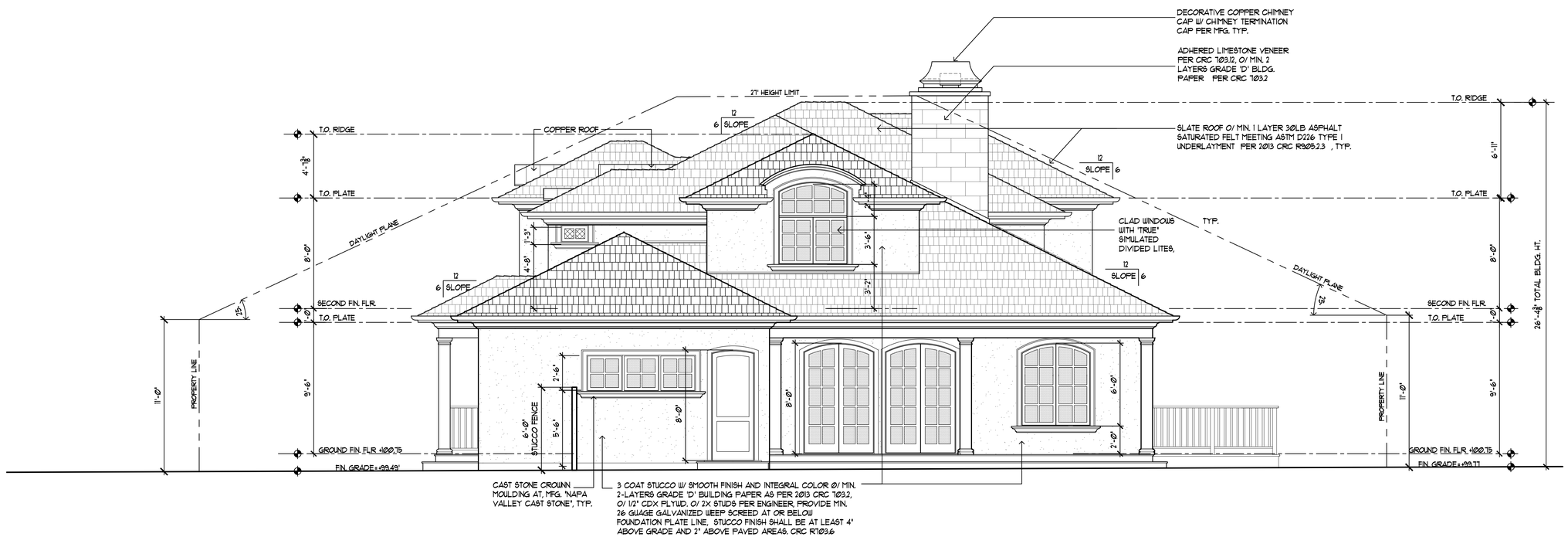

2 REAR ELEVATION

1/4"=1'-0"

0' 1' 2' 3' 6' 8'

PROJECT TITLE & LOCATION

NEW RESIDENCE FOR

Patrick & Melissa McGregor

1014 RUSSELL AVENUE
LOS ALTOS, CA 94024

REVISION

J MALIKSI & ASSOC.
ARCHITECTURE ▫ INTERIOR DESIGN

675 MENLO AVENUE
MENLO PARK, CA 94025
TEL. NO. 650 323 2902
FAX NO. 650 323 6433

LICENSED ARCHITECT JAIME T. MALIKSI C-25460 EX. 02/28/17 STATE OF CALIFORNIA

NO.	DATE	ISSUE
GTM	2-25-2016	ISSUE FOR PLANNING
RAF	1-13-2016	FOR PLAN REVIEW
RAF	1-07-2016	DD

ALL DRAWINGS AND MATERIALS APPEARING HEREIN CONSTITUTE THE ORIGINAL AND UNPUBLISHED WORK OF THE ARCHITECT AND MAY NOT BE DUPLICATED, USED OR DISCLOSED WITHOUT THE PRIOR WRITTEN CONSENT OF THE ARCHITECT.
© 2015 JM MALIKSI & ASSOCIATES

DRAWING TITLE

FRONT ELEVATION
REAR ELEVATION

SCALE: 1/4" = 1'-0"
PROJECT NAME: MCGREGOR
CADD FILE NO.
DRAWING NO.

A-6

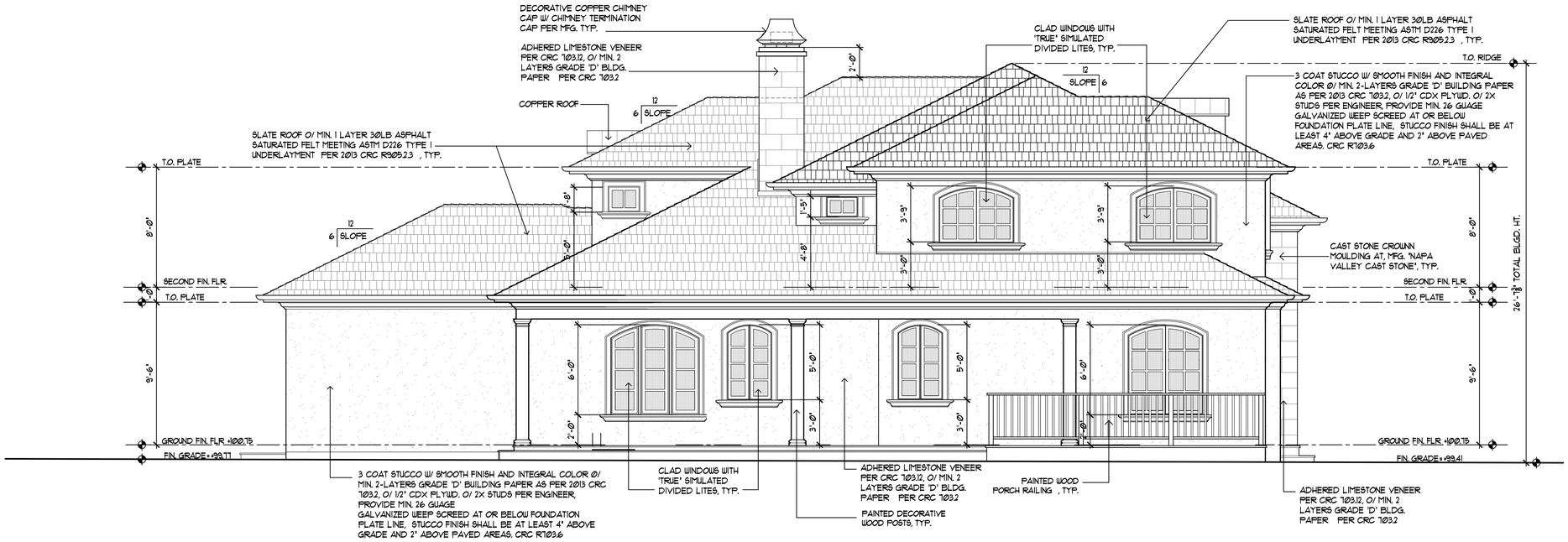

1 LEFT SIDE ELEVATION

1/4"=1'-0"

0' 1' 2' 3' 6' 8'

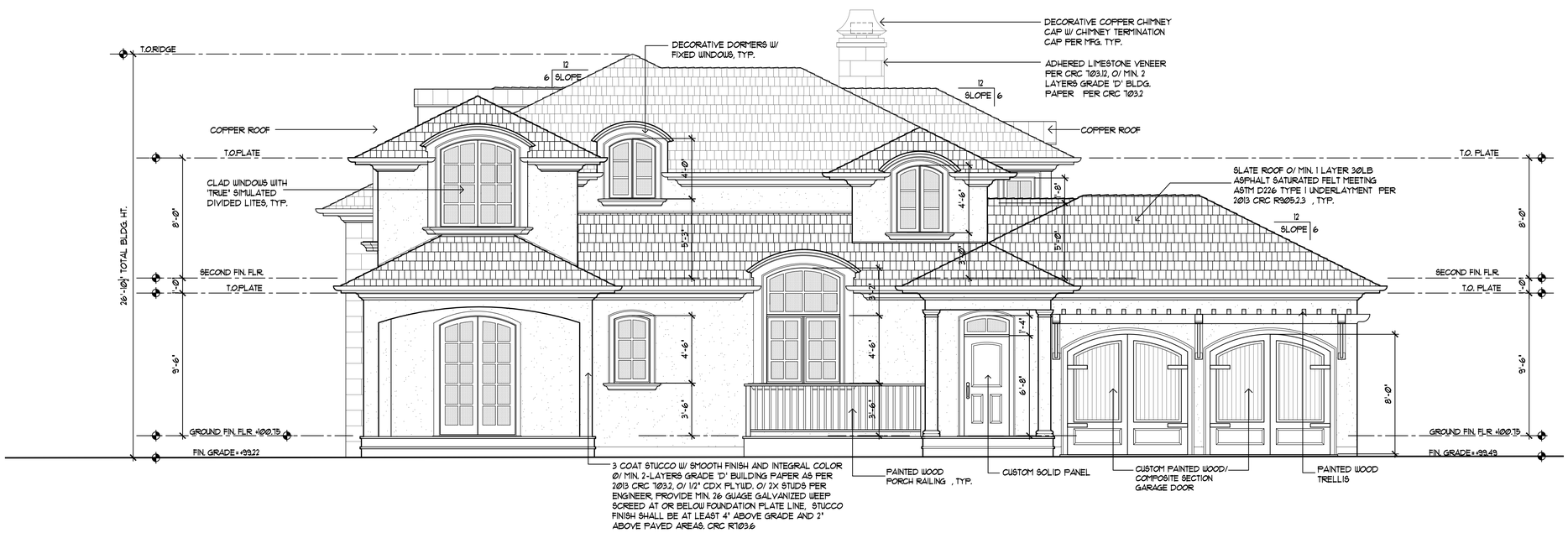

2 RIGHT SIDE ELEVATION

1/4"=1'-0"

0' 1' 2' 3' 6' 8'

PROJECT TITLE & LOCATION

NEW RESIDENCE FOR

Patrick & Melissa McGregor

1014 RUSSELL AVENUE
LOS ALTOS, CA 94024

REVISION

J MALIKSI & ASSOC.
ARCHITECTURE & INTERIOR DESIGN

675 MENLO AVENUE
MENLO PARK, CA 94025
TEL. NO. 650 323 2902
FAX NO. 650 323 6433

LICENSED ARCHITECT
JAYNE T. MALIKSI
C-25460
EX. 02/28/17
STATE OF CALIFORNIA

NO.	DATE	ISSUE
GTM	2-25-2016	ISSUE FOR PLANNING
RAF	1-13-2016	FOR PLAN REVIEW
RAF	1-07-2016	DD

ALL DRAWINGS AND MATERIALS APPEARING HEREIN CONSTITUTE THE ORIGINAL AND UNPUBLISHED WORK OF THE ARCHITECT AND MAY NOT BE DUPLICATED, USED OR DISCLOSED WITHOUT THE PRIOR WRITTEN CONSENT OF THE ARCHITECT.
© 2015 JM MALIKSI & ASSOCIATES

DRAWING TITLE

RIGHT SIDE ELEVATION & LEFT SIDE ELEVATION

SCALE: 1/4" = 1'-0"
PROJECT NAME: MCGREGOR
CADD FILE NO.
DRAWING NO.

A-7

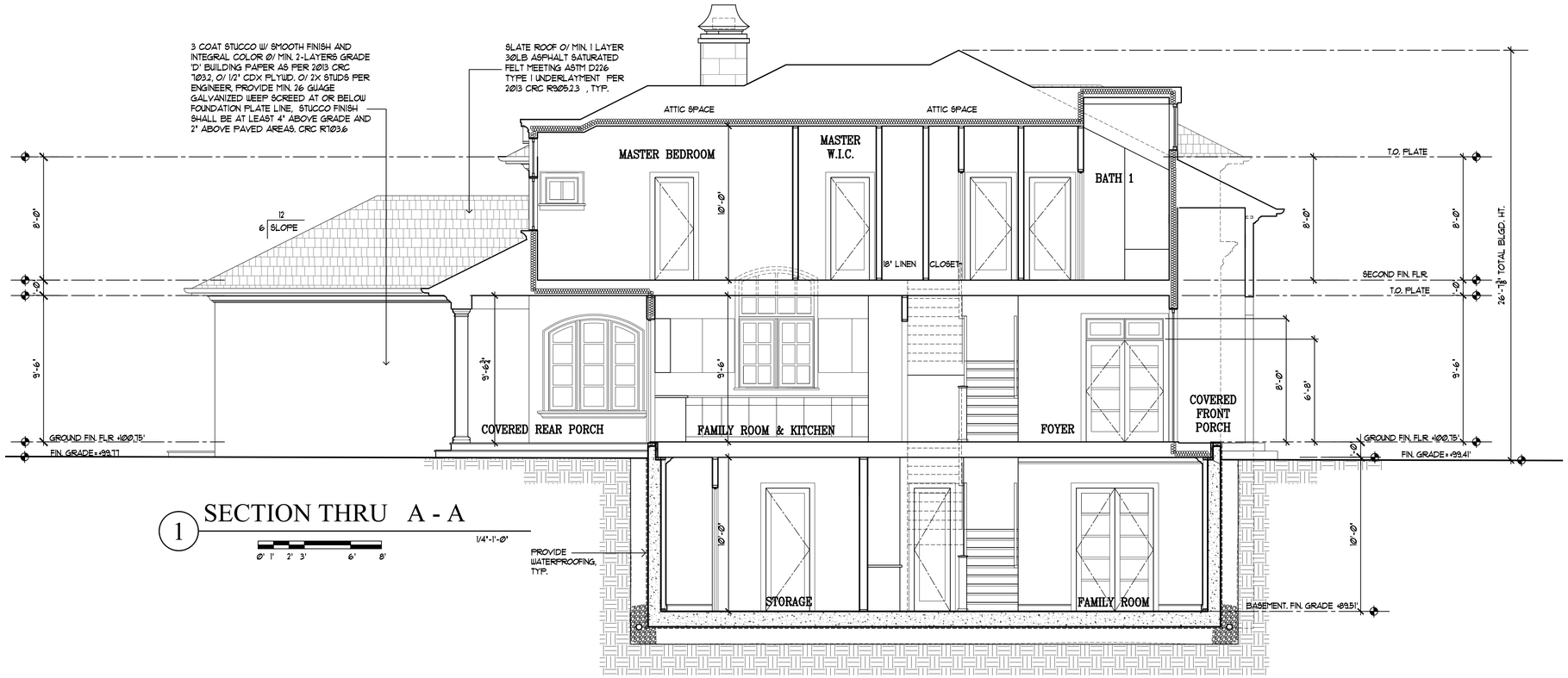

1 SECTION THRU A - A

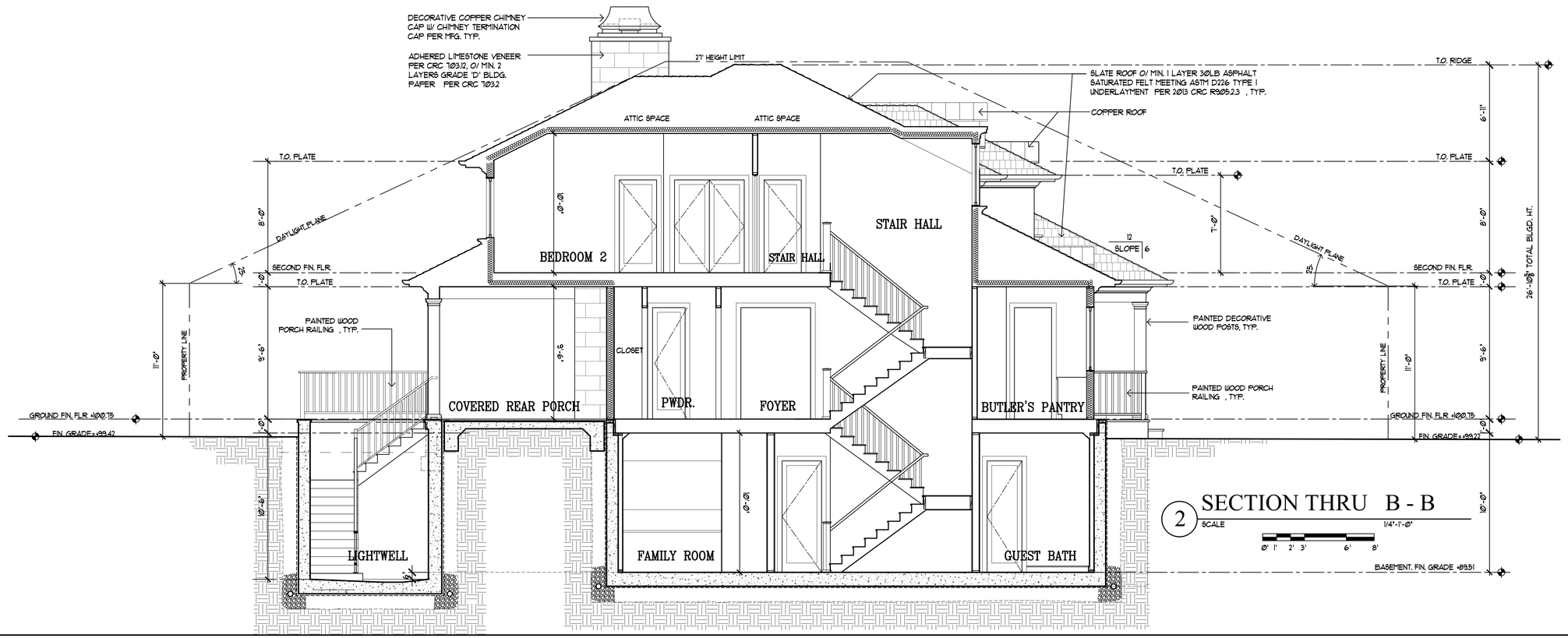

2 SECTION THRU B - B
SCALE

PROJECT TITLE & LOCATION

NEW RESIDENCE FOR

Patrick & Melissa McGregor

1014 RUSSELL AVENUE
LOS ALTOS, CA 94024

REVISION

J MALIKSI & ASSOC.
ARCHITECTURE ▫ INTERIOR DESIGN

675 MENLO AVENUE
MENLO PARK, CA 94025
TEL. NO. 650 323 2902
FAX NO. 650 323 6433

LICENSED ARCHITECT
JAIME T. MALIKSI
C-25460
EX. 02/28/17
STATE OF CALIFORNIA

NO.	DATE	ISSUE
GTM	2-25-2016	ISSUE FOR PLANNING
RAF	1-13-2016	FOR PLAN REVIEW
RAF	1-07-2016	DD

ALL DRAWINGS AND MATERIALS APPEARING HEREIN CONSTITUTE THE ORIGINAL AND UNPUBLISHED WORK OF THE ARCHITECT AND MAY NOT BE DUPLICATED, USED OR DISCLOSED WITHOUT THE PRIOR WRITTEN CONSENT OF THE ARCHITECT.
© 2015 JM MALIKSI & ASSOCIATES

DRAWING TITLE

SECTION THRU A-A
SECTION THRU B-B

SCALE: 1/4" = 1'-0"
PROJECT NAME: MCGREGOR
CADD FILE NO.
DRAWING NO.

A-8

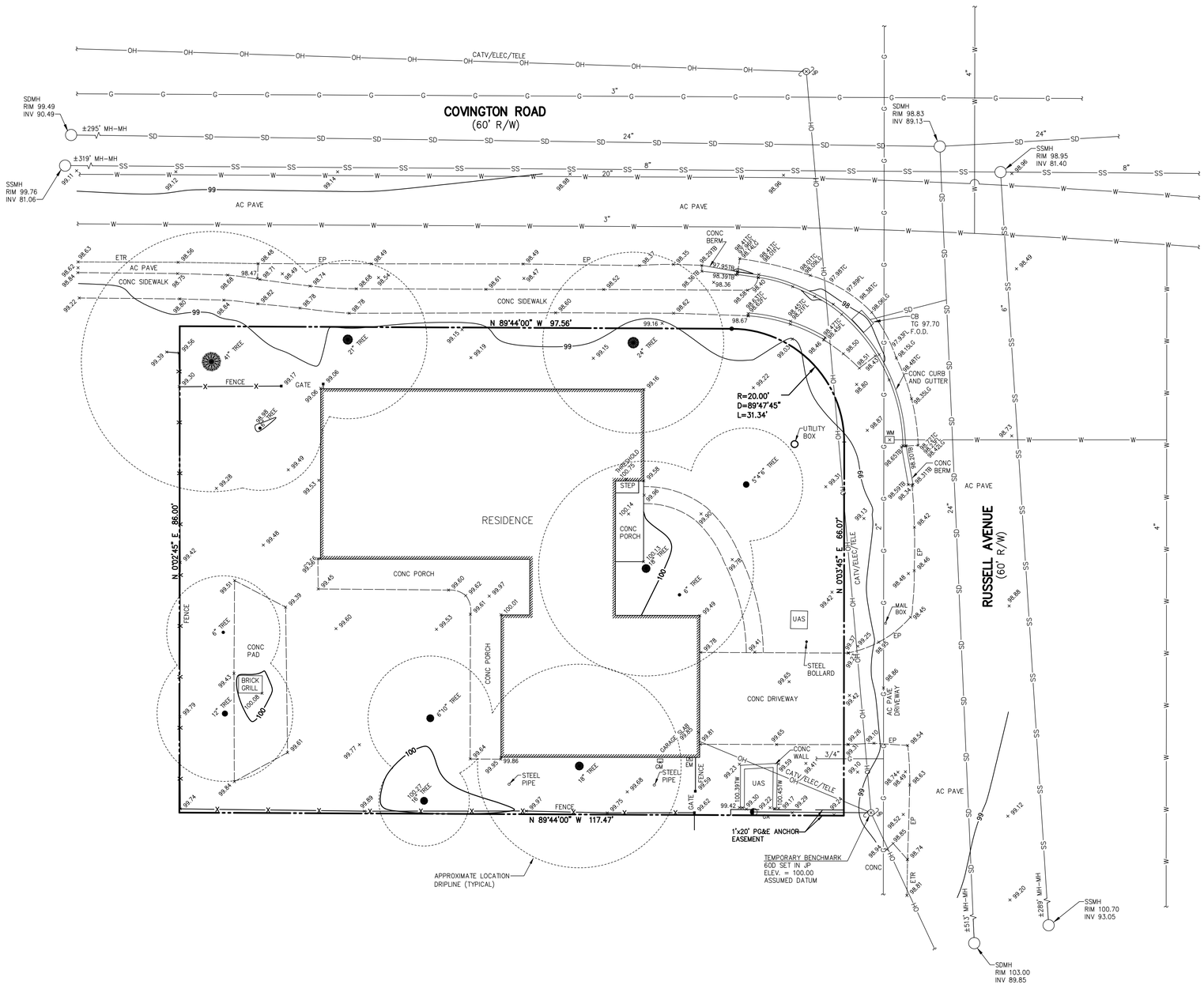

LEGEND

——-·-·——	PROPERTY LINE
AC PAVE	ASPHALT CONCRETE PAVEMENT
CATV	CABLE TELEVISION
CONC	CONCRETE
ELEC	ELECTRIC
EM	ELECTRIC METER
EP	EDGE OF PAVEMENT
ETR	EDGE OF TRAVELED ROAD
FL	FLOWLINE
F.O.D.	FULL OF DEBRIS
GA	GUY ANCHOR
GM	GAS METER
INV	INVERT
JP	JOINT UTILITY POLE
LG	LIP OF GUTTER
SDMH	STORM DRAIN MANHOLE
SSMH	SANITARY SEWER MANHOLE
TC	TOP OF CURB
TELE	TELEPHONE
TG	TOP OF GRATE
TW	TOP OF WALL
UAS	UNKNOWN ACCESS STRUCTURE
WM	WATER METER
●12" TREE	TREE W/ SIZE
—X——X—	FENCE
——G——	GAS LINE
——OH——	OVERHEAD LINE
——SS——	SANITARY SEWER LINE
——SD——	STORM DRAIN LINE
——W——	WATER LINE

LOT AREA:

= 10,017 SQ. FT. ±
= 0.230 ACRES ±

UTILITY NOTE:

THE UTILITIES EXISTING ON THE SURFACE AND SHOWN ON THIS DRAWING HAVE BEEN LOCATED BY FIELD SURVEY. ALL UNDERGROUND UTILITIES SHOWN ON THIS DRAWING ARE FROM RECORDS OF THE VARIOUS UTILITY COMPANIES AND THE SURVEYOR/ENGINEER DOES NOT ASSUME RESPONSIBILITY FOR THEIR COMPLETENESS, INDICATED LOCATION, OR SIZE. RECORD UTILITY LOCATION SHOULD BE CONFIRMED BY EXPOSING THE UTILITY.

EASEMENT NOTE:

EASEMENT INDICATED IS PER 40 MAPS 53, OTHER EASEMENTS, IF ANY, ARE NOT INDICATED HEREON.

GRAPHIC SCALE

10 0 5 10 20 40

(IN FEET)
1 inch = 10 ft.

REV.	DESCRIPTION	BY:	DATE:

LICENSED LAND SURVEYOR
MANUEL G. MACLEOD
No. 5304
STATE OF CALIFORNIA

MacLEOD AND ASSOCIATES
CIVIL ENGINEERING • LAND SURVEYING
965 CENTER STREET•SAN CARLOS•CA 94070•(650) 593-8580

PREPARED FOR:
PATRICK McGREGOR

TOPOGRAPHIC SURVEY PLAN

1014 RUSSELL AVENUE
A.P.N. 189-10-041
LOT 1, 40 MAPS 53
LOS ALTOS SANTA CLARA COUNTY CALIFORNIA

DRAWN BY:	MDL
DESIGNED BY:	---
CHECKED BY:	DGM
SCALE:	1"=10'
DATE:	09-11-15
DRAWING NO.	4239-TOPO
SHEET	1 OF 1

McGREGOR RESIDENCE
1014 RUSSELL AVENUE
LOS ALTOS, CALIFORNIA

LEGEND

EXISTING	PROPOSED	DESCRIPTION
		BOUNDARY
		PROPERTY LINE
		RETAINING WALL
		LANDSCAPE RETAINING WALL
	RW RW	RAINWATER TIGHTLINE
	SUB	SUBDRAIN LINE
	TL	TIGHTLINE
SD	SD	STORM DRAIN LINE
SS	SS	SANITARY SEWER LINE
W	W	WATER LINE
G	G	GAS LINE
P	P	PRESSURE LINE
JT	JT	JOINT TRENCH
		SET BACK LINE
		CONCRETE VALLEY GUTTER
		EARTHEN SWALE
CB	CB	CATCH BASIN
JB	JB	JUNCTION BOX
AD	AD	AREA DRAIN
		CURB INLET
SDMH	SDMH	STORM DRAIN MANHOLE
		FIRE HYDRANT
SSMH	SSMH	SANITARY SEWER MANHOLE
		STREET SIGN
222.57 INV	222.57 INV	SPOT ELEVATION
		FLOW DIRECTION
	D	DEMOLISH/REMOVE
		BENCHMARK
200	200	CONTOURS
	XX" TREE	TREE TO BE REMOVED

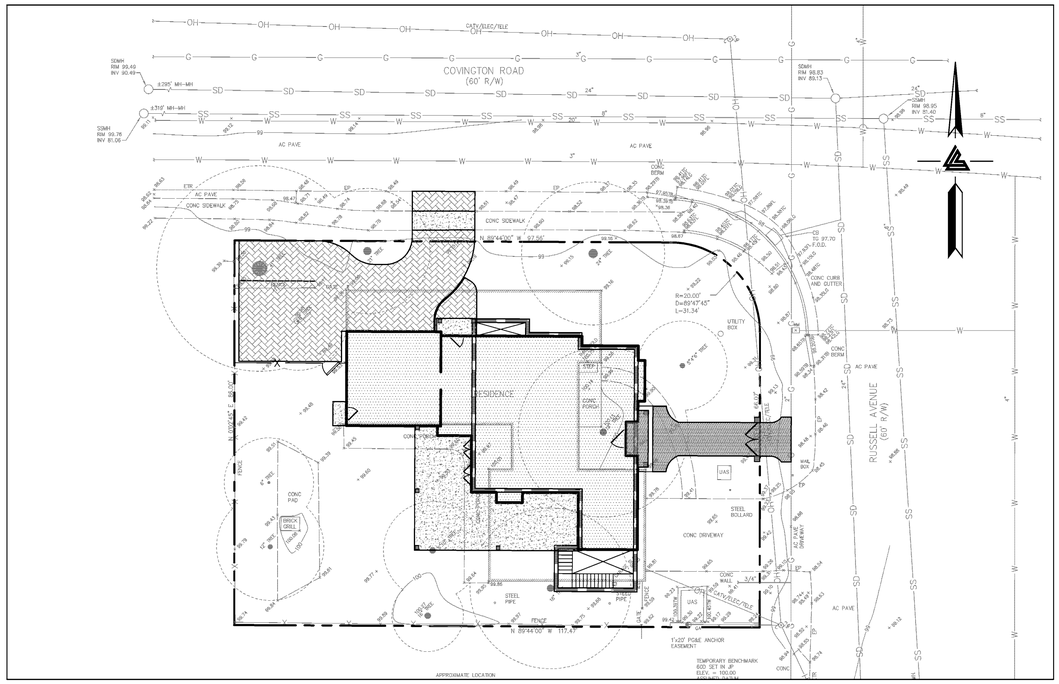

KEY MAP
1" = 16'

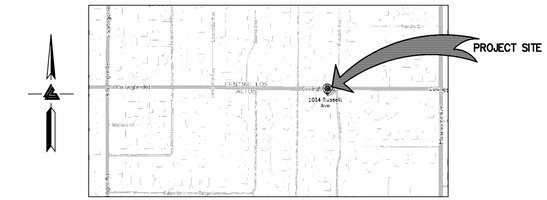

VICINITY MAP
NTS

OWNER'S INFORMATION
OWNER:
PATRICK McGREGOR
1014 RUSSELL AVENUE
LOS ALTOS, CA 94024

APN: 189-10-041

REFERENCES
THIS GRADING AND DRAINAGE PLAN IS SUPPLEMENTAL TO:
1. TOPOGRAPHIC SURVEY BY MacLEOD & ASSOCIATES ENTITLED;
   "TOPOGRAPHIC SURVEY PLAN"
   1014 RUSSELL AVENUE
   LOS ALTOS, CA
   DATED: 9-1-15
   JOB#: 4239-TOPO
2. SITE PLAN BY J MALIKSI & ASSOCIATES ENTITLED:
   "NEW RESIDENCE"
   1014 RUSSELL AVENUE
   LOS ALTOS, CA
   DATED: 12-22-15
   PROJECT: MCGREGOR
3. SOIL REPORT BY TO BE DETERMINED ENTITLED:
   "GEOTECHNICAL INVESTIGATION"
   1014 RUSSELL AVENUE
   LOS ALTOS, CA

THE CONTRACTOR SHALL REFER TO THE ABOVE NOTED SURVEY AND PLAN, AND SHALL VERIFY BOTH EXISTING AND PROPOSED ITEMS ACCORDING TO THEM.

INSPECTIONS REQUIRED
LEA & BRAZE ENGINEERING, INC. TO INSPECT ALL STORM DRAINAGE AS IT IS INSTALLED. IT IS THE CONTRACTOR'S RESPONSIBILITY TO CONTACT LEA & BRAZE ENGINEERING, INC. PRIOR TO START OF CONSTRUCTION TO SET UP A PRE-CONSTRUCTION MEETING, AND TO CALL AT LEAST 48 HOURS IN ADVANCE OF ANY INSPECTIONS. PIPES ARE TO REMAIN UNCOVERED UNTIL AN INSPECTION PERFORMED BY LEA & BRAZE ENGINEERING, INC. OCCURS.

POINT OF CONTACT:
PETER CARLINO
LEA & BRAZE ENGINEERING, INC.
(510)887-4086 pcarlino@leabraze.com

ABBREVIATIONS

AB	AGGREGATE BASE	LF	LINEAR FEET
AC	ASPHALT CONCRETE	MAX	MAXIMUM
ACC	ACCESSIBLE	MH	MANHOLE
AD	AREA DRAIN	MIN	MINIMUM
BC	BEGINNING OF CURVE	MON.	MONUMENT
B & D	BEARING & DISTANCE	(N)	NEW
BM	BENCHMARK	NO.	NUMBER
BW/FG	BOTTOM OF WALL/FINISH GRADE	NTS	NOT TO SCALE
CB	CATCH BASIN	O.C.	ON CENTER
C & G	CURB AND GUTTER	O/	OVER
℄	CENTER LINE	(PA)	PLANTING AREA
CPP	CORRUGATED PLASTIC PIPE (SMOOTH INTERIOR)	PED	PEDESTRIAN
CO	CLEANOUT	PIV	POST INDICATOR VALVE
COTG	CLEANOUT TO GRADE	PSS	PUBLIC SERVICES EASEMENT
CONC	CONCRETE	℞	PROPERTY LINE
CONST	CONSTRUCT or -TION	PP	POWER POLE
CONC COR	CONCRETE CORNER	PUE	PUBLIC UTILITY EASEMENT
CY	CUBIC YARD	PVC	POLYVINYL CHLORIDE
D	DIAMETER	R	RADIUS
DI	DROP INLET	RCP	REINFORCED CONCRETE PIPE
DIP	DUCTILE IRON PIPE	RIM	RIM ELEVATION
EA	EACH	RW	RAINWATER
EC	END OF CURVE	R/W	RIGHT OF WAY
EG	EXISTING GRADE	S	SLOPE
EL	ELEVATIONS	S.A.D.	SEE ARCHITECTURAL DRAWINGS
EP	EDGE OF PAVEMENT	SAN	SANITARY
EQ	EQUIPMENT	SD	STORM DRAIN
EW	EACH WAY	SDMH	STORM DRAIN MANHOLE
(E)	EXISTING	SHT	SHEET
FC	FACE OF CURB	S.L.D.	SEE LANDSCAPE DRAWINGS
FF	FINISHED FLOOR	SPEC	SPECIFICATION
FG	FINISHED GRADE	SS	SANITARY SEWER
FH	FIRE HYDRANT	SSCO	SANITARY SEWER CLEANOUT
FL	FLOW LINE	SSMH	SANITARY SEWER MANHOLE
FS	FINISHED SURFACE	ST.	STREET
G	GAS	STA	STATION
GA	GAGE OR GAUGE	STD	STANDARD
GB	GRADE BREAK	STRUCT	STRUCTURAL
HDPE	HIGH DENSITY CORRUGATED POLYETHYLENE PIPE	T	TELEPHONE
HORIZ	HORIZONTAL	TC	TOP OF CURB
HI PT	HIGH POINT	TEMP	TEMPORARY
H&T	HUB & TACK	TP	TOP OF PAVEMENT
ID	INSIDE DIAMETER	TW/FG	TOP OF WALL/FINISH GRADE
INV	INVERT ELEVATION	TYP	TYPICAL
JB	JUNCTION BOX	VC	VERTICAL CURVE
JT	JOINT TRENCH	VCP	VITRIFIED CLAY PIPE
JP	JOINT UTILITY POLE	VERT	VERTICAL
L	LENGTH	W/	WITH
LNDG	LANDING	W, WL	WATER LINE
		WM	WATER METER
		WWF	WELDED WIRE FABRIC

RETAINING WALL NOTES

1. TW/FG REPRESENTS FINISHED EARTHEN GRADE OR PAVEMENT ELEVATION AT TOP OF WALL, NOT ACTUAL TOP OF WALL MATERIAL. BW/FG REPRESENTS FINISH EARTHEN GRADE OR PAVEMENT ELEVATION AT BOTTOM OF WALL NOT INCLUDING FILL FOUNDATION. GRADES INDICATED ON THESE PLANS REFER TO THE FINISHED GRADES ADJACENT TO THE RETAINING WALL, NOT INCLUDING FOOTING, FREEBOARD, ETC.
2. DIMENSIONS SHOWN IN BRACKETS SHOWN AS [X.X'] DENOTE THE EFFECTIVE WALL HEIGHT ONLY. THE ACTUAL WALL HEIGHT AND DEPTH MAY DIFFER DUE TO CONSTRUCTION REQUIREMENTS.
3. REFER TO SPECIFIC WALL CONSTRUCTION DETAIL FOR STRUCTURAL ELEMENTS, FREEBOARD, AND EMBEDMENT.
4. REFER TO ARCHITECTURAL, LANDSCAPE ARCHITECTURE, AND/OR STRUCTURAL PLANS FOR DETAILS, WALL ELEVATIONS, SUBDRAINAGE, WATERPROOFING, FINISHES, COLORS, STEEL REINFORCING, MATERIALS, ETC. PROVIDE CLIPS OR OTHER MEANS OF SECURING FINISH MATERIALS AS NECESSARY (WET SET INTO THE WALL).
5. SEE DETAIL SHEET FOR SPECIFIC INFORMATION.
6. PROVIDE GUARDRAIL (WHERE APPLICABLE AND DESIGNED BY OTHERS) AS REQUIRED FOR GRADE SEPARATION OF 30 INCHES OR MORE MEASURED 5' HORIZONTALLY FROM FACE OF WALL, PER CBC.

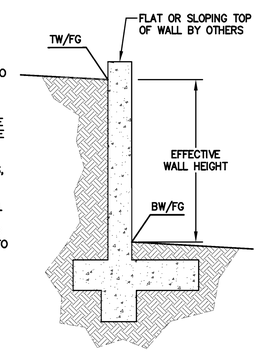

ESTIMATED EARTHWORK QUANTITIES

CUBIC YARDS	WITHIN BUILDING FOOTPRINT	OUTSIDE BUILDING FOOTPRINT	TOTAL CUBIC YARDS
CUT	621	10	631
FILL	0	0	0
EXPORT / IMPORT			631

NOTE:
GRADING QUANTITIES REPRESENT BANK YARDAGE. IT DOES NOT INCLUDE ANY SWELLING OR SHRINKAGE FACTORS AND IS INTENDED TO REPRESENT IN-SITU CONDITIONS. QUANTITIES DO NOT INCLUDE OVER-EXCAVATION, TRENCHING, STRUCTURAL FOUNDATIONS OR PIERS, OR POOL EXCAVATION (IF ANY). NOTE ADDITIONAL EARTHWORKS, SUCH AS KEYWAYS OR BENCHING MAY BE REQUIRED BY THE GEOTECHNICAL ENGINEER IN THE FIELD AT TIME OF CONSTRUCTION. CONTRACTOR TO VERIFY QUANTITIES.

EXISTING UTILITY NOTE:
THE UTILITIES EXISTING ON THE SURFACE AND SHOW ON THIS DRAWING HAVE BEEN LOCATED BY FIELD SURVEY. ALL UNDERGROUND UTILITIES SHOWN ON THIS DRAWING ARE FROM RECORDS OF THE VARIOUS UTILITY COMPANIES AND THE SURVEYOR/ENGINEER DOES NOT ASSUME RESPONSIBILITY FOR THEIR COMPLETENESS, INDICATED LOCATION, OR SIZE. RECORD UTILITY LOCATION SHOULD BE CONFIRMED BY EXPOSING THE UTILITY.

EASEMENT NOTE:
EASEMENT INDICATED IS PER 40 MAPS 53,OTHER EASEMENTS, IF ANY, ARE NOT INDICATED HEREON.

NOTE:
FOR CONSTRUCTION STAKING SCHEDULING OR QUOTATIONS PLEASE CONTACT GREG BRAZE AT LEA & BRAZE ENGINEERING (510)887-4086 EXT 103. gbraze@leabraze.com

*** BUILDING PAD NOTE:**
ADJUST PAD LEVEL AS REQUIRED. REFER TO STRUCTURAL PLANS FOR SLAB SECTION OR CRAWL SPACE DEPTH TO ESTABLISH PAD LEVEL.

1-800-227-2600 CALL BEFORE YOU DIG USA UNDERGROUND SERVICE ALERT

NOTES:
CONTRACTOR SHALL OBTAIN THE PROPER PERMITS PRIOR TO ANY GRADING.

A SEPARATE PERMIT IS REQUIRED FOR ANY & ALL WORK WITHIN THE CITY RIGHT-OF-WAY. THE CONTRACTOR(S) SHALL OBTAIN AN APPROVED STREET WORK (ENCROACHMENT PERMIT) PERMIT FROM THE PUBLIC WORKS DEPARTMENT PRIOR TO THE COMMENCEMENT OF THIS WORK WITHIN THE CITY RIGHT-OF-WAY. ALL GRADED SLOPES SHALL BE PLANTED WITH FAST GROWING, DEEP ROOTED GROUND COVER TO REDUCE THE EROSION DURING HEAVY RAINS.

REFER TO ARCHITECTURAL PLANS FOR ADDITIONAL INFORMATION, INCLUDING BUT NOT LIMITED TO: ADDITIONAL UTILITY SERVICES, DIMENSION CONTROL, DEMOLITION, DETAILS, TREE PROTECTION MEASURES, AND LANDSCAPING.

FINISHED GRADE ELEVATIONS NOTED AS [FG (MAX.)] ARE THE MAXIMUM ALLOWABLE GRADE AT THE BUILDING PERIMETER TO PROVIDE 6" MIN CLEAR TO GRADE PER U.B.C. SECTION 2317.8. THESE GRADES MAY BE LOWER PROVIDED PROPER FLOW AWAY FROM THE FOUNDATION IS ACHIEVED. REFER TO ARCHITECTURAL & STRUCTURAL DRAWINGS FOR SPECIAL DETAILS AS REQUIRED.

CONTRACTOR SHALL NOTIFY THE OWNER AND/OR MAINTENANCE STAFF IN WRITING OF THE NEED OF PERIODIC MAINTENANCE OF THE DRAINAGE SYSTEM AND STRUCTURES.

SHEET INDEX

C-1.0 TITLE SHEET
C-2.0 GRADING & DRAINAGE PLAN
C-3.0 DETAILS
C-3.1 DETAILS
C-4.0 GRADING SPECIFICATIONS
ER-1 EROSION CONTROL
ER-2 EROSION CONTROL DETAILS
SW-1 STORMWATER POLLUTION PREVENTION PLAN

REGISTERED PROFESSIONAL ENGINEER PETER CARLINO No. C79555 CIVIL STATE OF CALIFORNIA
ORIGINAL SIGNATURES IN BLUE INK

LEA & BRAZE ENGINEERING, INC.
CIVIL ENGINEERS • LAND SURVEYORS
BAY AREA REGION
2495 INDUSTRIAL PKWY WEST
HAYWARD, CALIFORNIA 94545
(P) (510) 887-4086
(F) (510) 887-3019
SACRAMENTO REGION
3017 DOUGLAS BLVD. # 300
ROSEVILLE, CA 95661
(P) (916)366-1338
(F) (916)797-7363
WWW.LEABRAZE.COM

McGREGOR RESIDENCE
1014 RUSSELL AVENUE
LOS ALTOS, CALIFORNIA
SANTA CLARA COUNTY
APN: 189-10-041

TITLE SHEET

REVISIONS	BY
–	–
–	–
–	–
–	–
–	–

JOB NO:	2151387
DATE:	1-12-16
SCALE:	1" = 16'
DESIGN BY:	PC
DRAWN BY:	TB
SHEET NO:	C-1.0

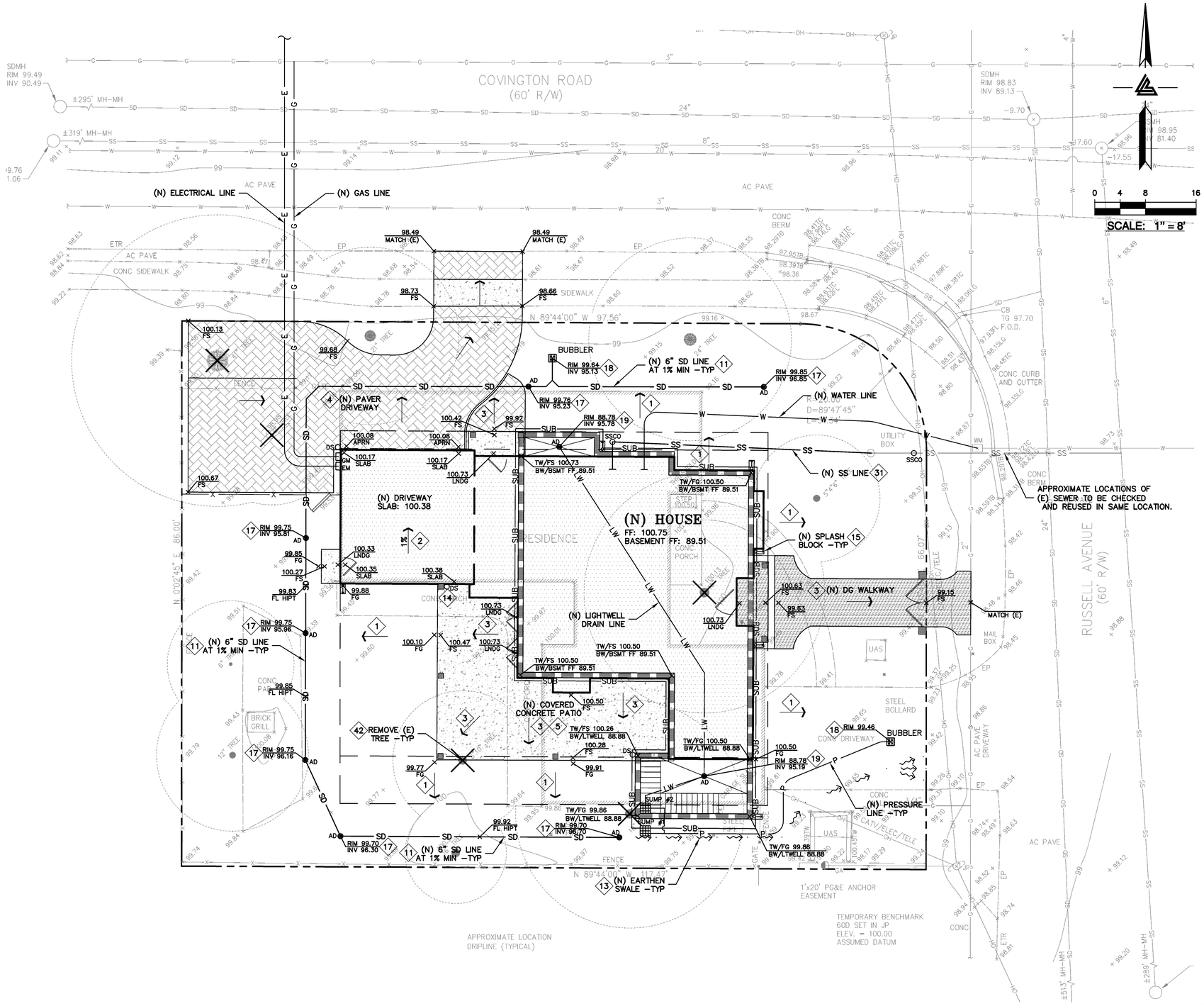

FLATWORK KEYNOTES 1 TO 6

1. FINISHED GRADES AT BUILDING PERIMETER SHALL BE SLOPED AT A MINIMUM OF 5% FOR THE FIRST 10' AWAY FROM THE BUILDING PER CBC 1804.3 OR TO AN APPROVED DRAINAGE SWALE OR STRUCTURE. GRADES SHALL CONTINUE TO SLOPE TOWARDS POSITIVE DRAINAGE AND A POSITIVE OUTFALL. MAINTAIN 8" CLEARANCE BETWEEN FINISH EARTHEN GRADE AND BOTTOM OF MUD SILL AT ALL TIMES PER CBC 2304.11.2 UNLESS STRUCTURAL DETAILING ALLOWS LESS. REFER TO STRUCTURAL PLANS FOR FOUNDATION DESIGN AND DETAILS.
2. SLOPE GARAGE SLAB 1% MINIMUM (1/8" PER FOOT) FROM BACK TO FRONT TO ALLOW FOR ADEQUATE DRAINAGE. MAINTAIN 1/2" TO 1" LIP BETWEEN GARAGE SLAB AND DRIVEWAY. SEE PLANS FOR SPECIFIC DROP
3. PROVIDE 2% (1% MIN.) SLOPE ACROSS FLAT WORK AND/OR PAVING PER CBC 2304.11.2. SLOPE TOWARDS POSITIVE DRAINAGE AS SHOWN ON PLAN.
4. INSTALL (N) CONCRETE PAVER DRIVEWAY. SEE DETAIL 1 ON SHEET C-3.0.
5. (N) CONCRETE PATIOS/WALKWAYS. SEE DETAIL 2 ON SHEET C-3.0.
6. (N) DECOMPOSED GRANITE PATIOS/WALKWAYS. SEE DETAIL 3 ON SHEET C-3.0.

STORM DRAIN KEYNOTES 11 TO 22

11. INSTALL (N) ON-SITE STORM DRAIN SYSTEM. USE MINIMUM 6" PVC (SDR 35) OR HDPE (ADS N-12 W/ SMOOTH INTERIOR WALLS). MAINTAIN 24" MINIMUM COVER AND SLOPED AT 1% MINIMUM AT ALL TIMES UNLESS OTHERWISE NOTED. PROVIDE CLEAN OUT TO GRADE AT MAJOR CHANGES IN DIRECTION. AVOID USING 90° BENDS AND INSTEAD USE (2) 45° BENDS AND WYE CONNECTIONS.
12. INSTALL (N) SUBDRAIN. USE PERFORATED 4" PVC (SDR-35) WITH HOLES DOWN AND SLOPED AT 1% MINIMUM SURROUND WITH 3/4" DRAIN ROCK WRAPPED IN FILTER FABRIC (MIRAFI 140N). MIRADRAIN OR OTHER LEA & BRAZE PREAPPROVED DRAINAGE SYSTEM MAY ALSO BE USED. AVOID USING 90° BENDS AND INSTEAD USE (2) 45° BENDS AND WYE CONNECTIONS. PROVIDE CLEANOUT TO GRADE AT MAJOR CHANGES IN DIRECTION AND AT 100' MAXIMUM INTERVALS. SUBDRAIN SHALL REMAIN A DEDICATED SEPARATE SYSTEM UNTIL IT CONNECTS TO STORM DRAIN SYSTEM OR OUTFALL AS SHOWN. SEE DETAIL 5 ON SHEET C-3.0.
13. CONSTRUCT (N) EARTHEN SWALE SLOPED AT 1% MINIMUM TOWARDS POSITIVE OUTFALL. SEE DETAIL 4 ON SHEET C-3.0.
14. CONNECT RAIN WATER DOWNSPOUTS TO 4" PVC (SDR-35) TIGHTLINE, SLOPED AT 1% MINIMUM. DIRECT TO NEAREST STORM DRAIN LINE. PROVIDE CLEAN OUT TO GRADE AT MAJOR CHANGES IN DIRECTION. AVOID USING 90° BENDS AND INSTEAD USE (2) 45° BENDS. TIGHTLINE MAY BE PLACED IN COMMON TRENCH WITH SUBDRAIN LINES, HOWEVER, NOT CONNECT TO SUBDRAIN LINES. CONNECT TO NEAREST STORM DRAIN LINE AS SHOWN ON PLAN. SEE DETAIL 6A ON SHEET C-3.0.
15. DIRECT DOWNSPOUTS TO 24" LONG PRECAST CONCRETE SPLASHBLOCKS OR OTHER HARD SURFACE. DIRECT AWAY FROM ANY STRUCTURE AND TOWARDS POSITIVE DRAINAGE. SEE DETAIL 6B ON SHEET C-3.0.
16. INSTALL (N) 4" DIAMETER BRASS ATRIUM GRATE IN LANDSCAPE OR PLANTER AREAS (NDS PART 78B OR 90B FOR 6" DIAMETER BRASS ATRIUM GRATE). DO NOT USE PLASTIC GRATES. SEE DETAIL 7 ON SHEET C-3.0.
17. INSTALL (N) "CHRISTY V-24" CATCH BASIN W/ CONCRETE BOTTOM FLUSH W/ LOWEST OUTGOING INVERT. PLACE BOX ON 6" CLASS 2 AGGREGATE BASE MATERIAL.
18. INSTALL (N) BUBBLER BOX. SEE DETAIL 8 ON SHEET C-4.0.
19. INSTALL (N) LIGHTWELL AREA DRAINS.
20. INSTALL (N) LIGHTWELL OVERFLOW DRAIN. SEE DETAIL 1 ON SHEET C-3.0.
21. INSTALL (N) SUMP PUMP #1 FOR SUBDRAIN SYSTEM. SEE DETAIL 2 ON SHEET C-3.0.
22. INSTALL (N) SUMP PUMP #2 FOR LIGHTWELL DRAINAGE. SEE DETAIL 3 ON SHEET C-3.0.

UTILITIES KEYNOTES 31 TO 32

31. INSTALL (N) SANITARY SEWER LATERALS. USE 4" PVC (SDR-26) SLOPED AT 2% MINIMUM. CONNECT TO (E) SEWER MAIN AS SHOWN. PROVIDE CLEANOUT TO GRADE AT BUILDING AND BEHIND PROPERTY LINE AND AT MAJOR CHANGES IN DIRECTION AS SHOWN. REUSE (E) LATERAL IF POSSIBLE. CONNECT PER DISTRICT STANDARDS.
32. CONNECT (N) WATER SERVICE PER WATER DISTRICT STANDARDS. UPGRADE (E) WATER METER PER WATER DISTRICT STANDARDS AS APPLICABLE. INSTALL (N) 2" MINIMUM SERVICE LINE TO (N) RESIDENCE OR AS DIRECTED BY FIRE SPRINKLER DESIGNER.

DEMOLITION KEYNOTES 41 TO 43

41. DEMOLISH (E) IMPROVEMENTS AS NECESSARY TO ACCOMMODATE (N) CONSTRUCTION. NO DEMOLITION SHALL COMMENCE WITHOUT REQUIRED DEMOLITION PERMITS.
42. REMOVE (E) TREE. CONTRACTOR SHALL OBTAIN THE PROPER TREE REMOVAL PERMITS AS REQUIRED.
43. PROVIDE TREE PROTECTION AROUND TREES TO REMAIN. SEE DETAIL 9 ON SHEET C-3.0.

CALL BEFORE YOU DIG 1-800-227-2600 USA UNDERGROUND SERVICE ALERT

NOTE:
FOR CONSTRUCTION STAKING SCHEDULING OR QUOTATIONS PLEASE CONTACT GREG BRAZE AT LEA & BRAZE ENGINEERING (510)887-4086 EXT 103.
gbraze@leabraze.com

*** BUILDING PAD NOTE:**
ADJUST PAD LEVEL AS REQUIRED. REFER TO STRUCTURAL PLANS FOR SLAB SECTION OR CRAWL SPACE DEPTH TO ESTABLISH PAD LEVEL.

REGISTERED PROFESSIONAL ENGINEER GREGORY CARL BRAZE No. C79555 CIVIL STATE OF CALIFORNIA ORIGINAL SIGNATURES IN BLUE INK

LEA & BRAZE ENGINEERING, INC.
CIVIL ENGINEERS • LAND SURVEYORS
BAY AREA REGION
2495 INDUSTRIAL PKWY WEST
HAYWARD, CALIFORNIA 94545
(P) (510) 887-4086
(F) (510) 887-3019
SACRAMENTO REGION
3017 DOUGLAS BLVD. # 300
ROSEVILLE, CA 95661
(P) (916)966-1338
(F) (916) 797-7363
WWW.LEABRAZE.COM

McGREGOR RESIDENCE
10141 RUSSELL AVENUE
LOS ALTOS, CALIFORNIA

SANTA CLARA COUNTY

APN: 189-10-041

GRADING & DRAINAGE PLAN

REVISIONS	BY
–	–
–	–
–	–
–	–
–	–

JOB NO:	2151387
DATE:	1-12-16
SCALE:	1" = 8'
DESIGN BY:	PC
DRAWN BY:	TB
SHEET NO:	C-2.0

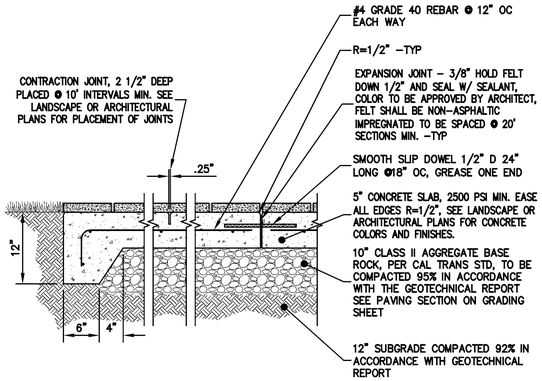

1 C-3.0 **DRIVEWAY SLAB OR CONC. PAVING**
NTS

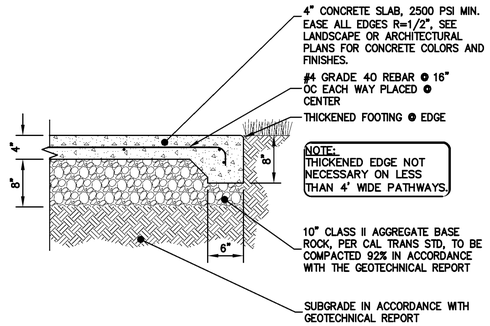

2 C-3.0 **PATIO SLABS**
NTS

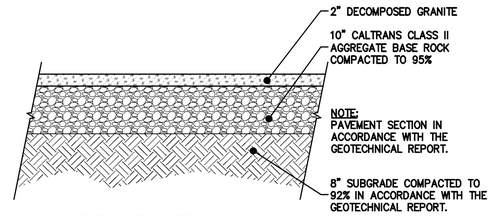

3 C-3.0 **DEOMPOSED GRANITE SLAB**
NTS

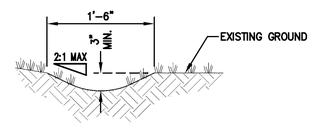

4 C-3.0 **EARTHEN SWALE DETAIL**
NTS

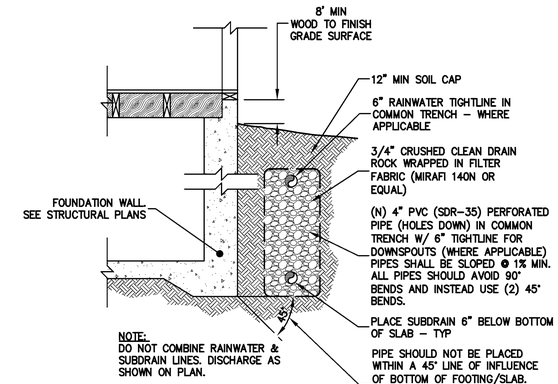

5 C-3.0 **SCHEMATIC SUBDRAIN**
NTS

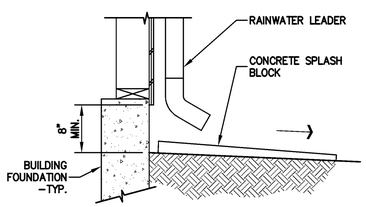

6A C-3.0 **SPLASHBLOCK AT RAIN WATER LEADER**
NTS

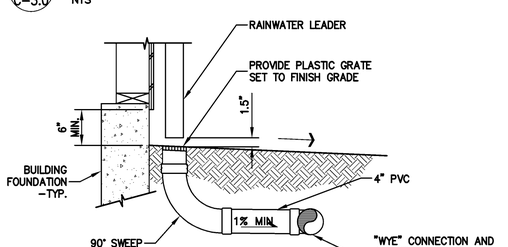

6B C-3.0 **RAIN WATER LEADER TO TIGHTLINE CONNECTION**
NTS

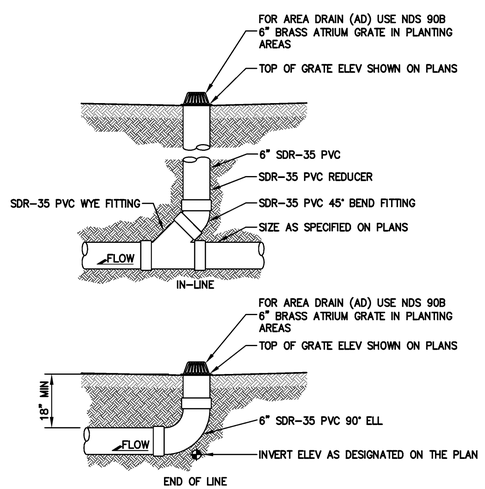

NOTE:
GLUED FITTINGS MAY BE SUBSTITUTED FOR GASKETED FITTINGS AT THE OPTION OF THE INSTALLATION CONTRACTOR.

7 C-3.0 **BRASS ATRIUM AREA DRAIN**
NTS

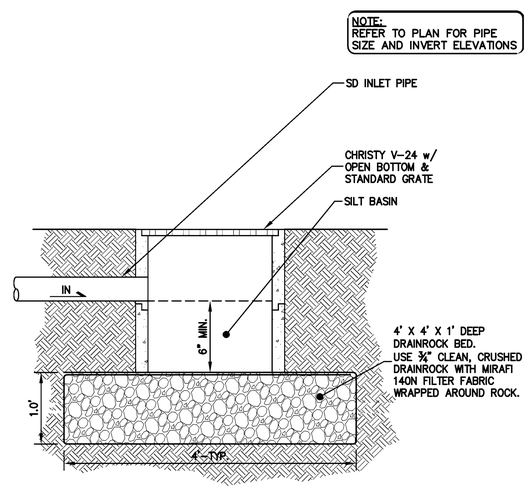

8 C-3.0 **GRAVEL BASIN INFILTRATION DETAIL**
NTS

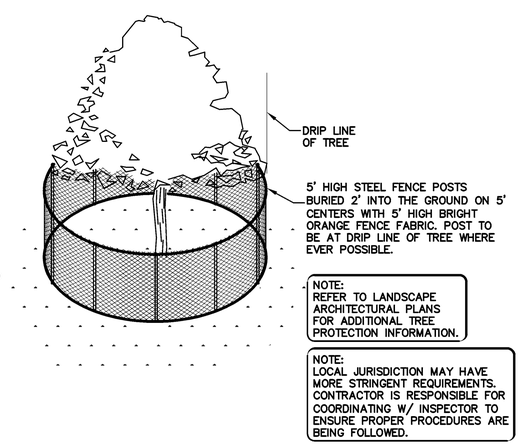

9 C-3.0 **EXISTING TREE PROTECTION**
NTS

REGISTERED PROFESSIONAL ENGINEER
PETER CARLANO
No. C79555
CIVIL
STATE OF CALIFORNIA
ORIGINAL SIGNATURES IN BLUE INK

LEA & BRAZE ENGINEERING, INC.
CIVIL ENGINEERS • LAND SURVEYORS
BAY AREA REGION
2495 INDUSTRIAL PKWY WEST
HAYWARD, CALIFORNIA 94545
(P) (510) 887-4086
(F) (510) 887-3019
SACRAMENTO REGION
3017 DOUGLAS BLVD. # 300
ROSEVILLE, CA 95661
(P) (916)966-1338
(F) (916)797-7363
WWW.LEABRAZE.COM

McGREGOR RESIDENCE
1014 RUSSELL AVENUE
LOS ALTOS, CALIFORNIA
SANTA CLARA COUNTY
APN: 189-10-041

DETAILS

REVISIONS	BY
-	-
-	-
-	-
-	-
-	-

JOB NO:	2151387
DATE:	1-12-16
SCALE:	NTS
DESIGN BY:	PC
DRAWN BY:	TB
SHEET NO:	C-3.0

03 OF XX SHEETS

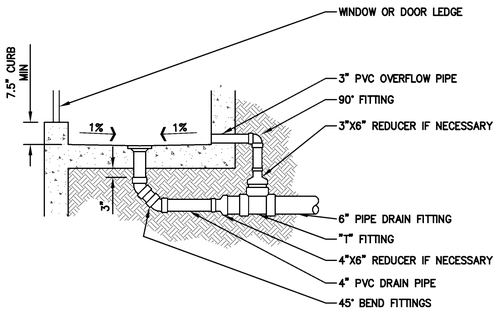

NOTES:
1. SLOPE INTERIOR SLAB OF LIGHTWELL @ 1% MIN IN ALL DIRECTIONS TO DIRECT FLOW TOWARDS INLET.
2. MAINTAIN 6" MIN FROM BOTTOM OF SILL/DOOR TO BOTTOM OF LIGHTWELL.
3. INSTALL "NEENAH R-4344" GRATE AND 3" PVC OUT GOING PIPE IN LIGHTWELLS NOT INTENDED TO HAVE FOOT TRAFFIC.
4. INSTALL 4" METAL GRATE AND 4" PVC OUTGOING PIPE IN AREAS INTENDED TO HAVE FOOT TRAFFIC.
5. INSTALL 3" PVC OVERFLOW PIPE AS SHOWN.
6. CONTRACTOR SHALL SUBMIT TO THE OWNER IN WRITING THE NEED FOR PERIODIC MAINTENANCE AND REMOVAL OF DEBRIS.
7. REFER TO STRUCTURAL PLAN FOR WALL CONSTRUCTION DETAIL.

1 / C-3.1 **LIGHTWELL OVERFLOW DETAIL**
NTS

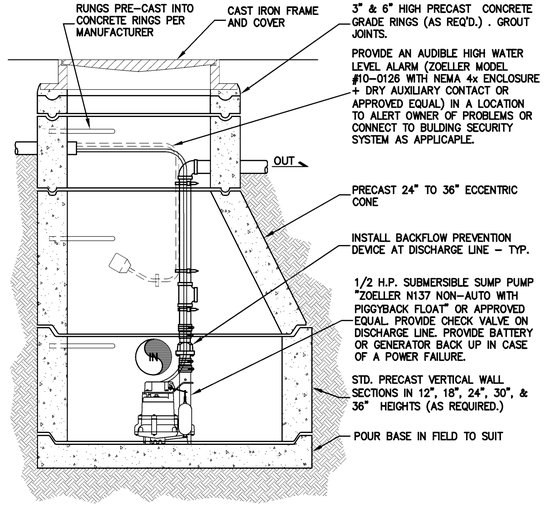

2 / C-3.1 **SUBDRAIN SUMP PUMP #1**
NTS

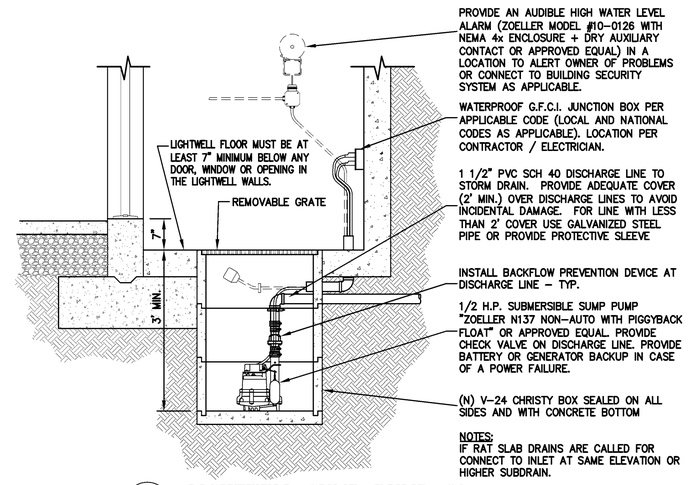

NOTES:
IF RAT SLAB DRAINS ARE CALLED FOR CONNECT TO INLET AT SAME ELEVATION OR HIGHER SUBDRAIN.

3 / C-3.1 **LIGHTWELL SUMP PUMP #2**
NTS

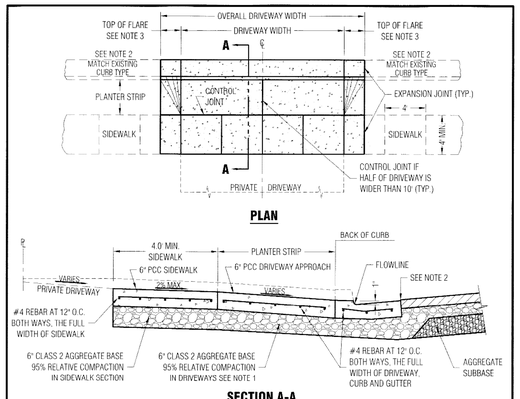

DETACHED SIDEWALK
SCALE: NOT TO SCALE

NOTES:
1. THICKNESS OF AGGREGATE BASE UNDER CURB AND GUTTER SHALL BE:
   * FOR NEW STREET SECTION: AS DETERMINED BY EXTENSION OF ROADWAY GRADING PLANE (6" MIN.) OR
   * FOR EXISTING STREET SECTION: 6"
2. SEE VERTICAL CURB AND ROLLED CURB AND GUTTER DETAIL SU-6
3. DRIVEWAY FLARE WIDTH:
   1.5' FOR RESIDENTIAL
   3.0' FOR COMMERCIAL & INDUSTRIAL
   MUST BE ADA COMPLIANT

Approved: City Engineer — Date 1/4/10

REVISION		ENGINEERING DIVISION	
Description	Date	DRIVEWAY DETAIL WITH PLANTER STRIP AND DETACHED SIDEWALK	SU-10

STANDARD DETAILS MAY 2010

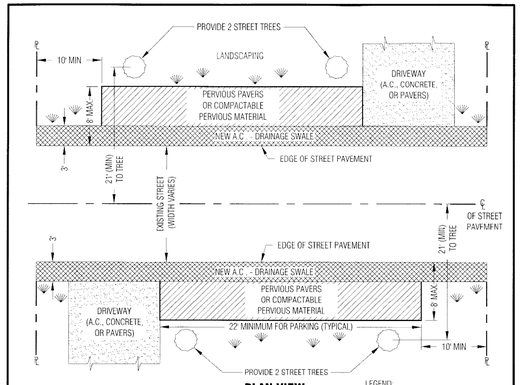

NOTES:
1. **IF THE STREET PAVEMENT WIDTH IS 36 FEET OR GREATER,** NO SHOULDER IMPROVEMENTS ARE PERMITTED WITH THE EXCEPTION OF LANDSCAPING AND IRRIGATION.
2. POLICY DOES NOT APPLY FOR REPAIRS, RESEALING, AND REPAVING IN KIND OF EXISTING SHOULDERS, NOR DOES IT REQUIRE THAT SHOULDERS MUST BE PAVED.
3. THE SHOULDER OF A NEWLY CONSTRUCTED OR 50% OR GREATER SQUARE FOOTAGE REMODELED RESIDENCE IS REQUIRED TO BE BROUGHT INTO COMPLIANCE WITH THIS POLICY.

LEGEND:
A.C. ASPHALT CONCRETE
℘ PROPERTY LINE
℄ CENTERLINE
EXISTING OR NEW LANDSCAPING
STREET TREE (NEW OR EXISTING)
NEW PERMEABLE SURFACE
NEW A.C. - DRAINAGE SWALE

Approved: City Engineer — Date 1/4/10

REVISION		ENGINEERING DIVISION	
Description	Date	SHOULDER PAVING POLICY	SU-20

STANDARD DETAILS MAY 2010

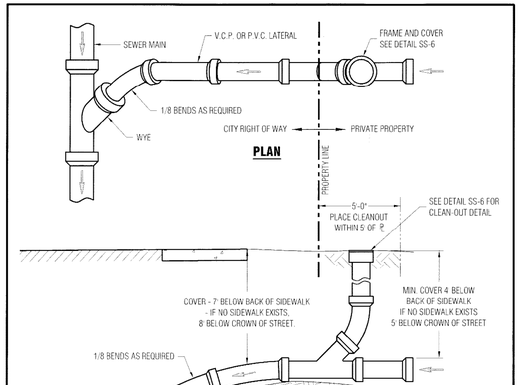

NOTES:
1. STAMP "S" IN CURB FACE TO SHOW LOCATION OF LATERAL SEE DETAIL SU-7
2. MINIMUM SLOPE OF LATERAL SHALL BE 1/4" PER 12"

Approved: City Engineer — Date 1/4/10

REVISION		ENGINEERING DIVISION	
Description	Date	SEWER LATERAL AND SEWER RISER	SS-5

STANDARD DETAILS MAY 2010

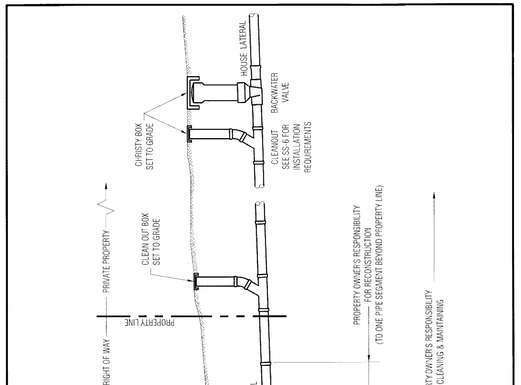

Approved: City Engineer — Date 1/4/10

REVISION		ENGINEERING DIVISION	
Description	Date	SEWER LATERAL DIVISION OF RESPONSIBILITY	SS-8

STANDARD DETAILS MAY 2010

REGISTERED PROFESSIONAL ENGINEER — JAVIER CARRANO — NO. C79555 — CIVIL — STATE OF CALIFORNIA — ORIGINAL SIGNATURES IN BLUE INK

LEA & BRAZE ENGINEERING, INC.
CIVIL ENGINEERS • LAND SURVEYORS
BAY AREA REGION
2495 INDUSTRIAL PKWY WEST
HAYWARD, CALIFORNIA 94545
(P) (510) 887-4086
(F) (510) 887-3019
SACRAMENTO REGION
3017 DOUGLAS BLVD. # 300
ROSEVILLE, CA 95661
(P) (916)966-1338
(F) (916)797-7363
WWW.LEABRAZE.COM

McGREGOR RESIDENCE
1014 RUSSELL AVENUE
LOS ALTOS, CALIFORNIA
SANTA CLARA COUNTY
APN: 189-10-041

DETAILS

REVISIONS	BY
–	–
–	–
–	–
–	–
–	–

JOB NO: 2151387
DATE: 1-12-16
SCALE: NTS
DESIGN BY: PC
DRAWN BY: TB
SHEET NO:
C-3.1
04 OF 8X SHEETS

PLANT LIST

QT	Size	Botanical Name	Water needs
13	15GAL	Prunus caroliniana 'Compacta'	L
4	20gal	Acer palmatum 'Fireglow'	M
2	24" box	Lagerstroemia indica 'Musgokee' (multi)	L
9	5gal	Polystichum munitum	M
11	5gal	Carpenteria californica 'Elizabeth'	L
15	5gal	Lomandra maxima 'Breeze'	L
17	5gal	Clivia miniata	M
10	5gal	Asparagus densiflorus 'Myeri'	M
13	5gal	Correa pulchella 'Dusky Bells'	L
8	5gal	Sarcococca ruscifolia	L
15	5gal	Coleonema pulchrum 'Sunset Gold'	L
14	5gal	Coprosma 'Verdi Vista'	L
20	5gal	Pittosporum tobira 'Creme de Menthe'	L
4	15gal	Olea 'Little Ollie'	L
13	5gal	Lavandula 'Provance'	L
21	5gal	Lantana 'Lavender Swirl'	L
8	5gal	Loropetalum chinensis 'Monraz'	L
4	15gal	Tibouchina urvilleana	M
9	1gal	Heuchera maxima	M
11	1gal	Helleborus orientalis	L
20	1gal	Geranium 'Rozanne'	M
20	1gal	Salvia leucantha 'Santa Barbara'	L
9	2gal	Rosa 'Floral Carpet Scarlett'	M

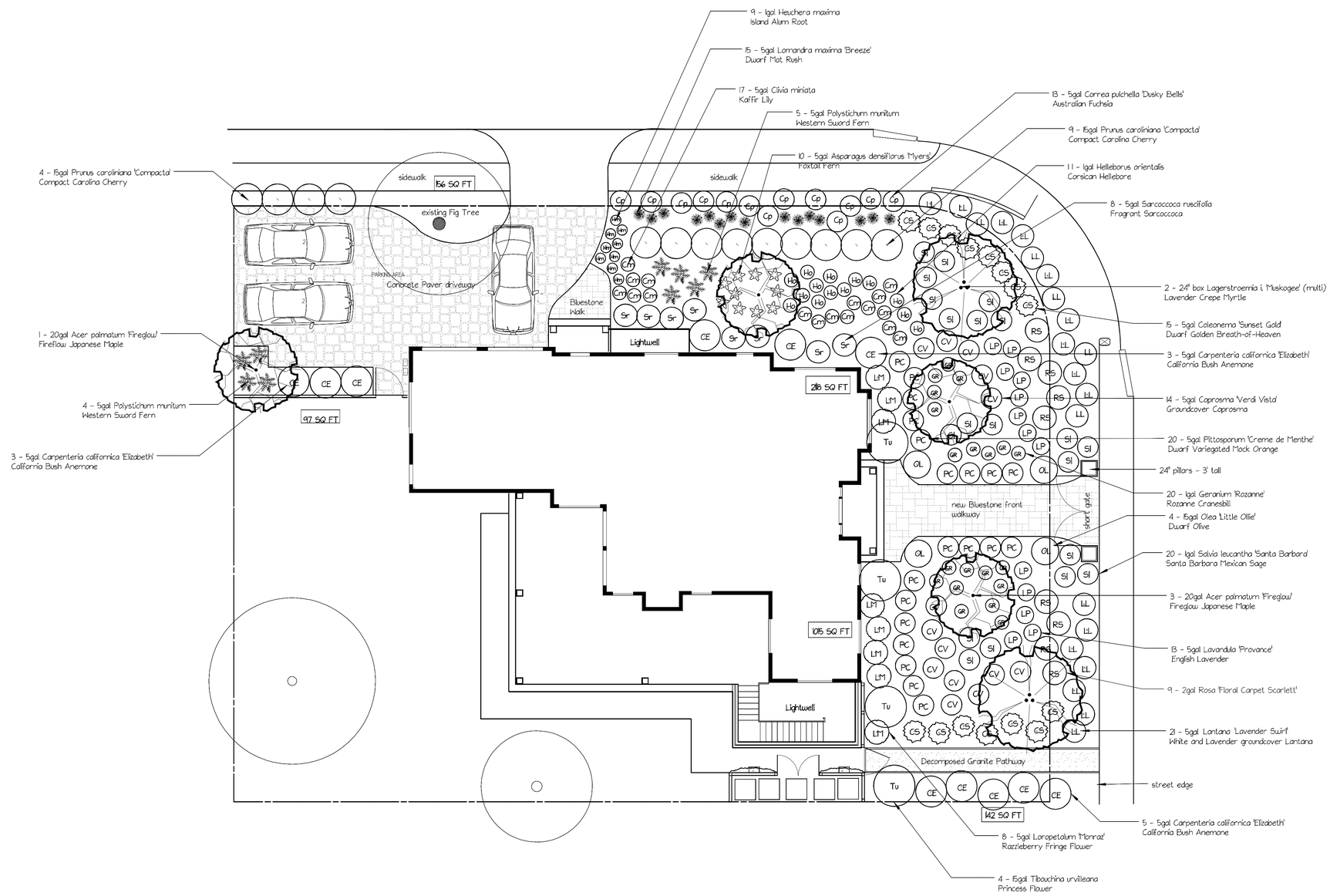

Garden Retreats by Peggy
Peggy Davidson
C27# 887678
831/238-0495

NORTH

LANDSCAPE PLAN

McGregor Residence
1014 Russell Ave. Los Altos, CA

SCALE 1/8" = 1'-0"
DATE Jan 5, 2016
DRAWING #

Powered by DynaSCAPE®