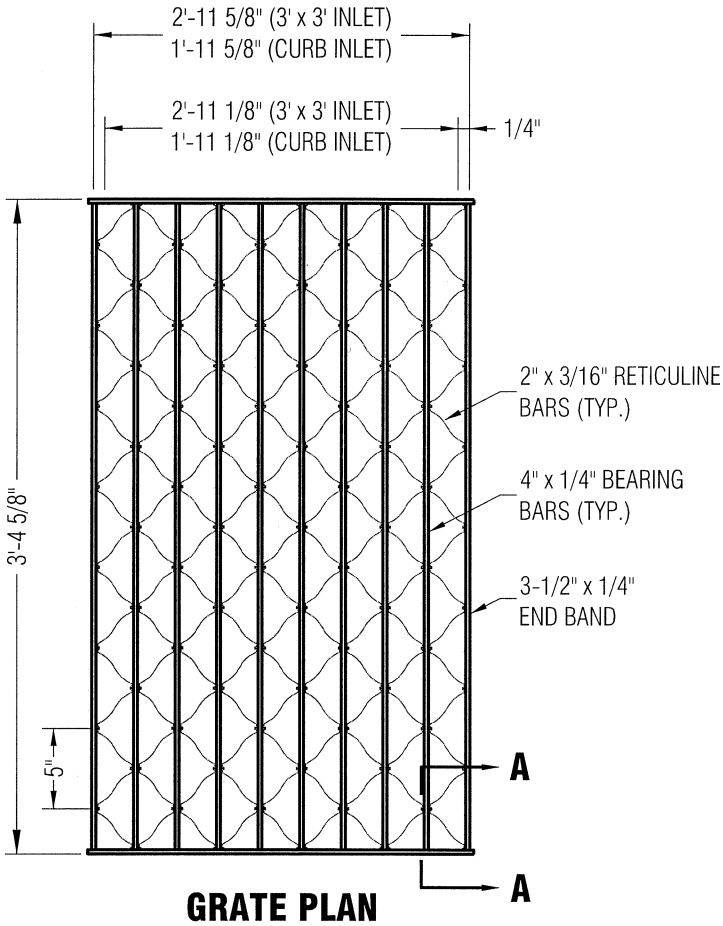

GRATE PLAN

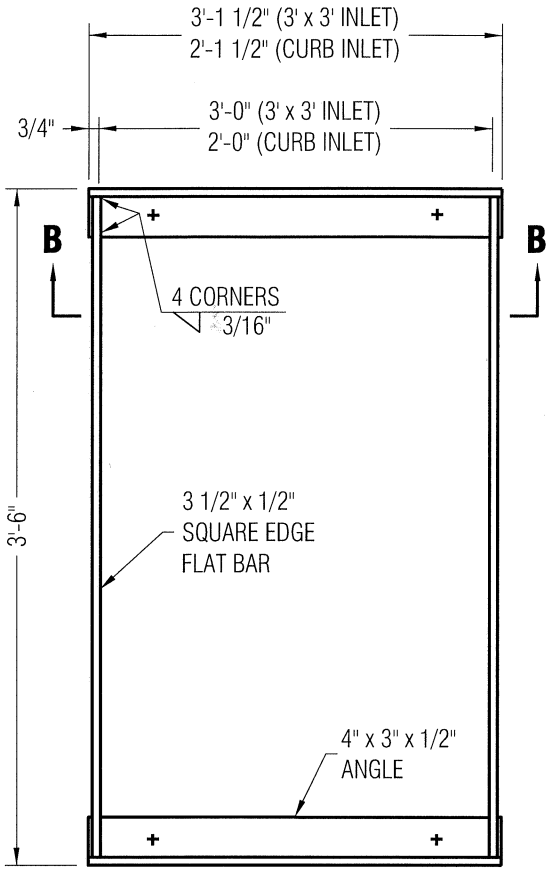

FRAME PLAN

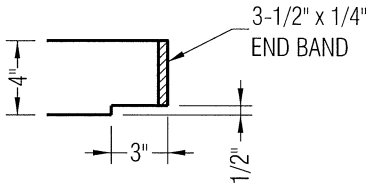

SECTION A-A

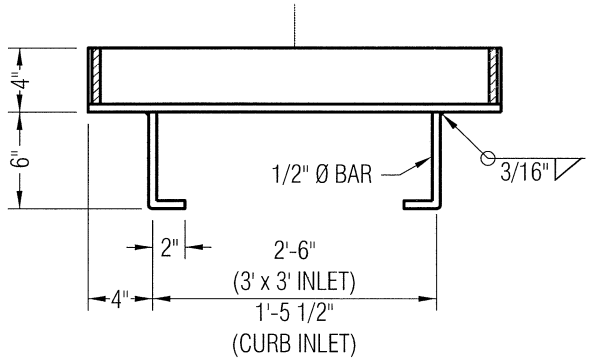

SECTION B-B

NOTES:

1. PLACE GRATE BARS PARALLEL TO FLOW.
2. FRAME , GRATE, ANCHORS AND ALL MISCELLANEOUS HARDWARE SHALL BE GALVANIZED AFTER FABRICATION.
3. CALTRANS TYPE 600-10S RETICULINE GRATE.

Approved: _____ City Engineer 1/4/10 Date

CITY OF LOS ALTOS · CALIFORNIA · INCORPORATED DECEMBER 1 · 1952

REVISION	
Description	Date

ENGINEERING DIVISION

3' x 3' INLET AND STANDARD CURB INLET FRAME AND GRATE

SD-7